9421000

# Model 942, 943, 944

# Cafforia

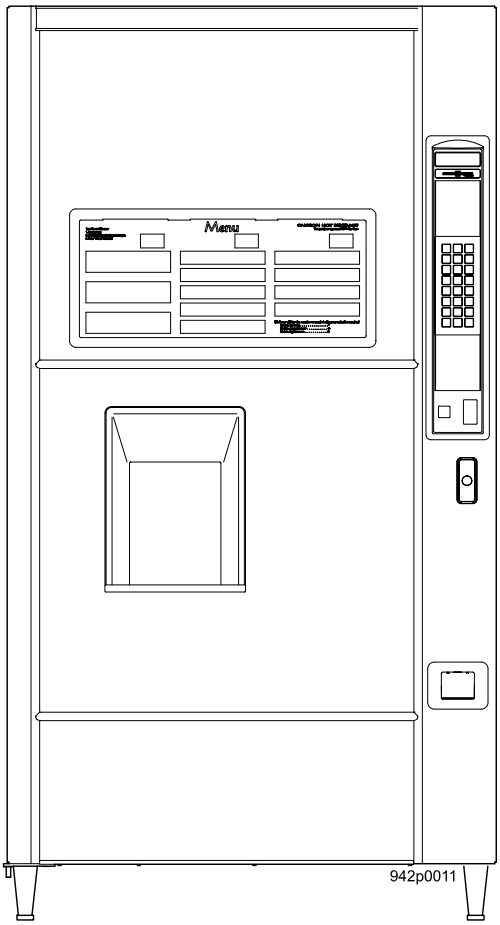


# Operators' Guide

AUTOMATIC PRODUCTS
A Crane Co. Company

165 Bridgepoint Dr.
South Saint Paul, MN 55075
www.AutomaticProducts.com

Copyright© 04-07

This document is available free of
charge to our customers at
www.automaticproducts.com

**Specifications** ..... **1**
Specifications Common to All Machines ..... 1
Specifications Unique to 115 Volt Machines ..... 2
**Major Parts** ..... **3**
**Controls and Indicators** ..... **7**
**Initial Set-up** ..... **11**
Location Preparation ..... 11
Power Requirements ..... 11
Water Requirements ..... 11
Positioning the Merchandiser ..... 12
Connecting Everything ..... 12
Connect the Merchandiser to the Water Supply ..... 12
Connect the Merchandiser to the Electrical Power Supply ..... 12
Final Mechanical Preparation ..... 13
Level the Merchandiser ..... 13
Mount the Base Plate ..... 13
Set Up the Menu Assembly ..... 14
Install the Water Filter Cartridge ..... 15
Load the Optional Filter Paper ..... 18
Install the Optional Coin Box Lock ..... 19
Load the Coin Mechanism ..... 20
Fill the Tank ..... 20
Fill the Canisters ..... 20
Load Cups ..... 21
Tell the Machine About the Cup Size(s) ..... 22
Test the Machine ..... 23
**Adjustments and Minor Maintenance** ..... **24**
Water Valve Adjustment ..... 24
Cup Mechanism Adjustment ..... 25
Grinder Adjustment ..... 26
Canister Installation ..... 28
Servicing Fluorescent Lights ..... 29
**Sanitation** ..... **30**
Basics ..... 30
Clean the Hot Water Tank ..... 31
Sanitation Procedures ..... 31

This document is available free of charge to our customers at www.automaticproducts.com

## Sanitation (continued)

Food Contact Parts ....31
Non Food-Contact Parts ....32
Brewer Cleaning ....32
Overall Cleaning ....35
Preventive Maintenance Cleaning ....35
Recommended Cleaning And Sanitation Intervals ....36
Record of Cleaning ....37

**Programming ....38**

Getting Around ....38
The Service Keypad ....38
The Selection Switch Panel ....38
The Display ....38
The Function Keys ....39
Other Keys ....39
Programming Procedures ....39
Control Panel Switch Functions ....40
SureVend™ ....41
The Supervisor Mode ....42

**Programming Procedures ....43**

Gain Access To The Supervisor Mode ....43
Enter A New Supervisor Code ....43
Enter A Freevend Code ....43
Enter a New Data Recall Code ....44
Lock Or Unlock Mode or Payout Keys ....44
Set Printer or DEX Options ....45
Select Printer Baud Rate ....45
Set DEX Options ....46
Select Display Language ....46
Set Talker Mode ....46
Select Coin Mechanism ....47
Select Bill Validator ....47
Select Card Reader ....49
Select Monetary Options ....49
Set Up Winner Mode ....51
Set Up Mug Discount ....52
Set the Machine Type and Configuration Code ....53
Disable Selections in the Merchandiser ....55
Set Up Cup Sizes ....55

This document is available free of charge to our customers at www.automaticproducts.com

## Programming Procedures (continued)

Assign Cup Sizes to Selections ....56
Set Up A Hot Drink ....57
Collecting Dry Product Gram Throws ....59
Collecting Hot Water Throws ....62
Recipes ....64
- Cappuccino ....64
- Caffé Latte ....65
- European Cappuccino ....66
- Blended Selections ....67

View or Set the Hot Water Tank Temperature ....68
Set up Low Temperature Dispensing ....68
Set up Low Power Settings ....69
Set the Automatic Brewer Rinse Time ....70
Set the Bowl Rinse Time ....70
Turn SureVend™ On or Off ....71
Optional or Mandatory SureVend™ ....71
Set Up the SureVend™ Anti-Jackpot Timer ....72
View Software Version ....72
Set the Time of Day ....72
Set the Day of the Week ....73
Set Month, Date, and Year ....73
Set Time-of-Day Inhibit Vending ....73
Set Time-of-Day Free Vending ....74
Set Time-of-Day Discount Vending ....74
Time Interval Editing ....74
Select a Standby Message ....76
Select an Out-of-Service Message ....76
Select a Freevend Message ....76
Edit Custom Message ....77
Entering Your Message ....78
View Water Tank Temperature ....79
View Machine Type/Configuration Setting ....79
View Cup Sizes Assigned to Selections ....80
Payout Coins ....80

This document is available free of charge to our customers at www.automaticproducts.com

## Programming Procedures (continued)

Set Prices ....81
Set Entire Machine To One Price ....81
Set The Price Of An Individual Selection....81
View Nonresettable Sales and Vend Data....81
View Data Three Different Ways ....82
View Total Paid Sales....82
View Total Paid Sales by Price Line ....82
View Total Paid Vends....83
View Total Paid Vends by Price Line ....83
Clear All Resettable Data ....83
Clear Paid Sales Data Only....83
View Amount in Coin Box....84
View Amount in Validator ....84
View Freevend Sales by Time Interval....84
View Discount Sales by Time Interval ....85
View Free Vends ....85
View Winners ....85
View Time Data ....86
View Total Unpaid Sales ....87
View Total Unpaid Vends....87
View Number of Test Vends ....87
View Number of Mug Vends....87
View Number of Alt Vends....88
View Machine ID Number....88
View Cup Ring Cycles Related to SureVend™ ....88
View Times No Cup Was Detected After a Cup Ring Cycled....89
View Home Switch Usage Related to SureVend™ ....89
Test Vend Selections and Verify Credit Added ....89
Test the Display....90
Test Drop a Cup ....90
Test the Whipper(s) ....90
Test the Grinder(s)....90
Test the Automatic Delivery Door ....91
Test the Air ....91
Test the Brewer ....91

This document is available free of charge to our customers at www.automaticproducts.com

## Programming Procedures (continued)

Rinse the Mixing Bowls ....92
Rinse the Brewer ....92
Test Switches or Sensors ....92
View SureVend™ Last Recorded Calibration Value ....93
View SureVend™ Average Calibration Value ....93
Clear Tank Errors and Fill the Tank ....93
View Diagnostic Messages ....94
Download Data To a PDCD ....96
Set Freevend Options ....96

This document is available free of charge to our customers at www.automaticproducts.com

# NOTES

This document is available free of charge to our customers at www.automaticproducts.com

# Specifications

### Specifications Common to All Machines

| | |
|---|---|
| **DIMENSIONS** | 72" (183 cm) high<br>38.12" (97 cm) wide<br>28.5" (72 cm) deep |
| **WEIGHT** | 570 lbs (258.5 kg) |
| **WATER REQUIREMENTS** | Minimum: 20 psi (137.8 kPa)<br>Maximum: 80 psi (551.2 kPa) |
| **AMBIENT TEMPERATURE** | Minimum: 41× F (5× C)<br>Maximum: 90× F (32× C) |
| **OPERATING ENVIRONMENT** | For indoor use only |
| **CUP CAPACITIES (APPROXIMATE)** | 12 oz cups = 600<br>14 oz cups = 530<br>16 oz cups = 380<br>20 oz cups = 358 |
| **CANISTER CAPACITIES (APPROXIMATE)** | Regular coffee beans - 14 lbs<br>Ground coffee - 13 lbs<br>Freeze dry coffee - 2 lbs<br>Decaf coffee beans - 9.5 lbs<br>Ground decaf coffee - 9 lbs<br>Freeze dry decaf - 2 lbs<br>Chocolate - 10 lbs<br>Soup - 6.7 lbs<br>Sugar - 11 lbs<br>Lightener - 4.5 lbs<br>Sugar substitute - 4 lbs<br>Tea (freeze dry) - 1.5 lbs<br>6th and 7th products (freeze dry) - 6 lbs each |
| **FILTER PAPER CAPACITY** | 2400 vends per roll |
| **PRODUCT OPTIONS** | |
| **MODEL 942 FRESH BREW** | Up to eleven selections of fresh brew regular and decaf coffee, freeze dried regular and decaf coffee, fresh brew and freeze dried tea, soup, chocolate, cappuccino, espresso, caffè latte, and two blended drinks. |
| **MODEL 943 FREEZE DRIED** | Up to eleven selections of freeze dried regular coffee, decaf coffee, tea, soup, chocolate, cappuccino, espresso, caffè latte, and two blended drinks. |
| **MODEL 944 FRESH BREW WITH BEAN GRINDER** | Up to nine selections of fresh ground and brewed regular and decaf coffee, freeze dried regular and decaf coffee, fresh brew and freeze dried tea, soup, chocolate, cappuccino, espresso, caffè latte, and two blended drinks. |

This document is available free of charge to our customers at www.automaticproducts.com

## Specifications Common to All Machines (continued)

| OPTIONS AND ACCESSORIES | |
|---|---|
| **OPTIONS** | Coin box lock<br>Base grille kit<br>Automatic delivery door<br>Flex Ace door lock and key<br>Van Door lock and key<br>Sugar substitute kit<br>6th product kit<br>Snap-on ingredient canister extension sleeves (4 tall)<br>Everpure water filter system<br>CUNO water filter system<br>Debit card validator<br>Free vend keyswitch<br>Data printer kit |

## Specifications Unique to 115 Volt Machines

| | |
|---|---|
| **ELECTRICAL** | 115 Volts AC<br>60 Hertz<br>16 Amps<br>Single phase |

## Options and Accessories

| INTERFACE | DEVICE | CMS | MEI | CONLUX | COINCO |
|---|---|---|---|---|---|
| **MDB** | **Coin Mechanisms** | | | | |
| | | NRI A66 | TRC6512 | CCM5G-1 | USQ-G7xx ** |
| | | NRI G46 | CASHFLOW 7512i | | VTX100 |
| | | | | | VTX101 |
| | **Bill Validators** | | | | |
| | | SMV2 4017 | VN2502-U5M | NBM-3000 | MAG 52R |
| | | SMV2 4117 | VN2502 | | MC2600 |
| | | MB-2017 (Recycler) | VN2562 | | BP2-CRX |
| | | | | | BP4SX |
| | **Cashless** | | | | |
| | Accepts NAMA1 & NAMA2 Interface | | | | |
| **Micromech & Pulse** | **Coin Mechanisms** | | | | |
| | 115V | | TRC-6000 * | | 9300L * |
| | | | Cashflow 4000 * | | |
| | 24V | | Cashflow 4010 * | | 9302LF * |
| | | | TRC6010XV * | | |
| | **Bill Validators** | | | | |
| | 115V | VN2501-U3/5E | | | |
| | 24V | VN2502-U3/5E | | | MAG 52R |
| | | | | | MC2600 |
| | Serial | VN2502 | | | |

* denotes items no longer in production
** denotes tube config

This document is available free of charge to our customers at www.automaticproducts.com

# Major Parts

The diagrams on the following pages will acquaint you with the major parts of the Cafforia. For more detailed information, please consult your **Parts Manual**. If you do not have a **Parts Manual**, contact Automatic Products Parts Department.

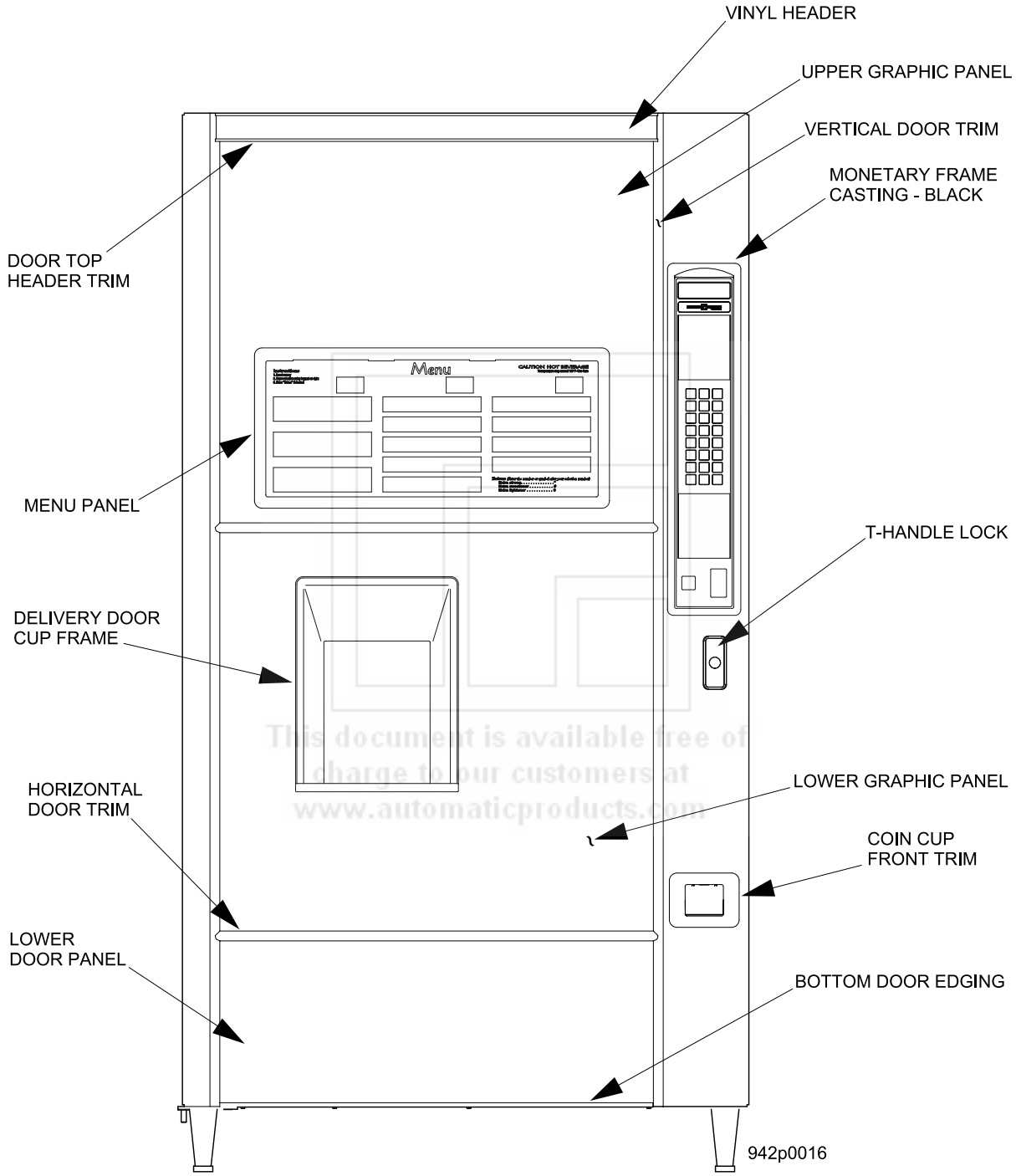


This document is available free of charge to our customers at www.automaticproducts.com

**Door Assembly - Exterior**

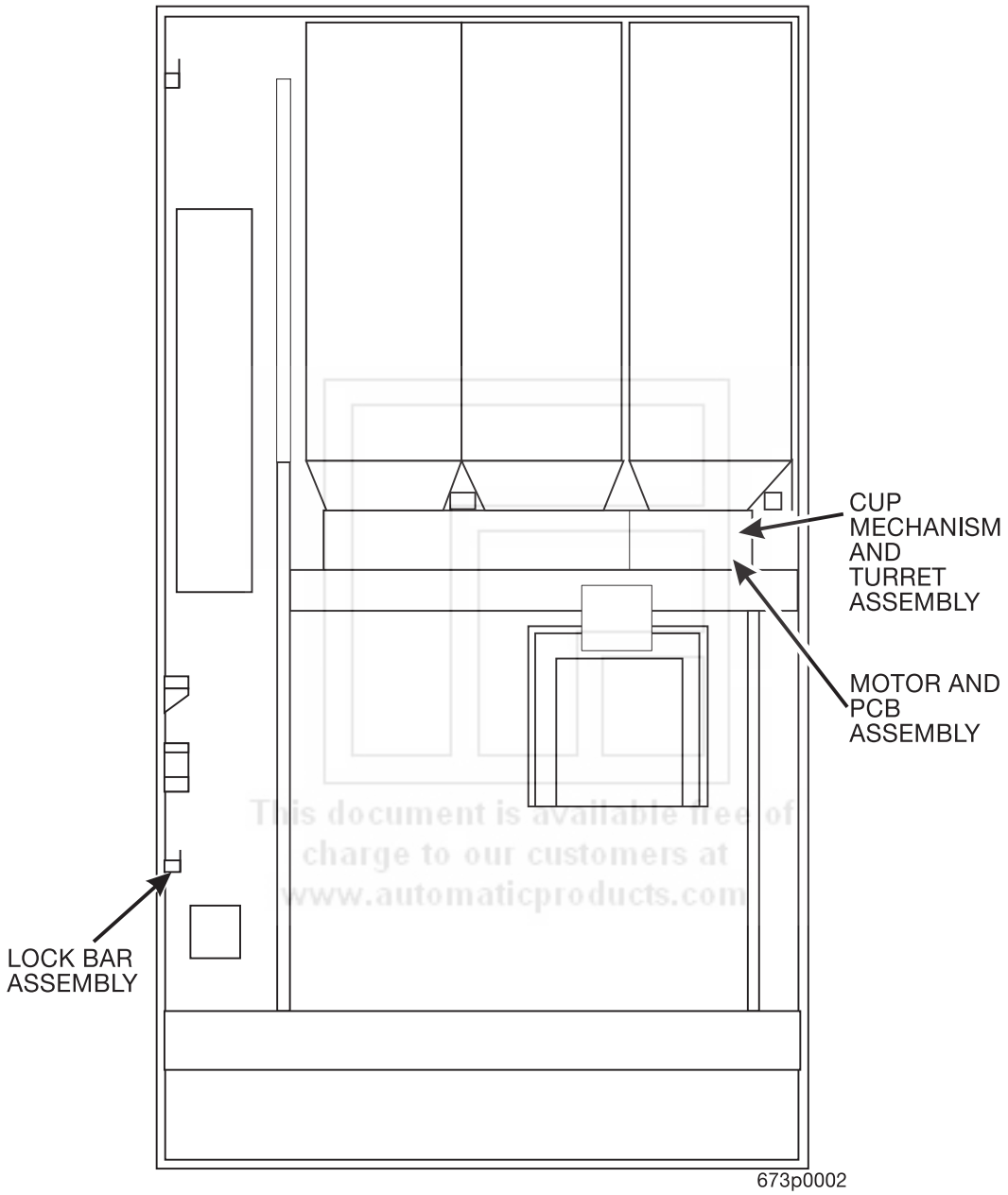


CONVENTIONAL DOOR SHOWN

This document is available free of charge to our customers at www.automaticproducts.com

**Door Assembly - Interior**

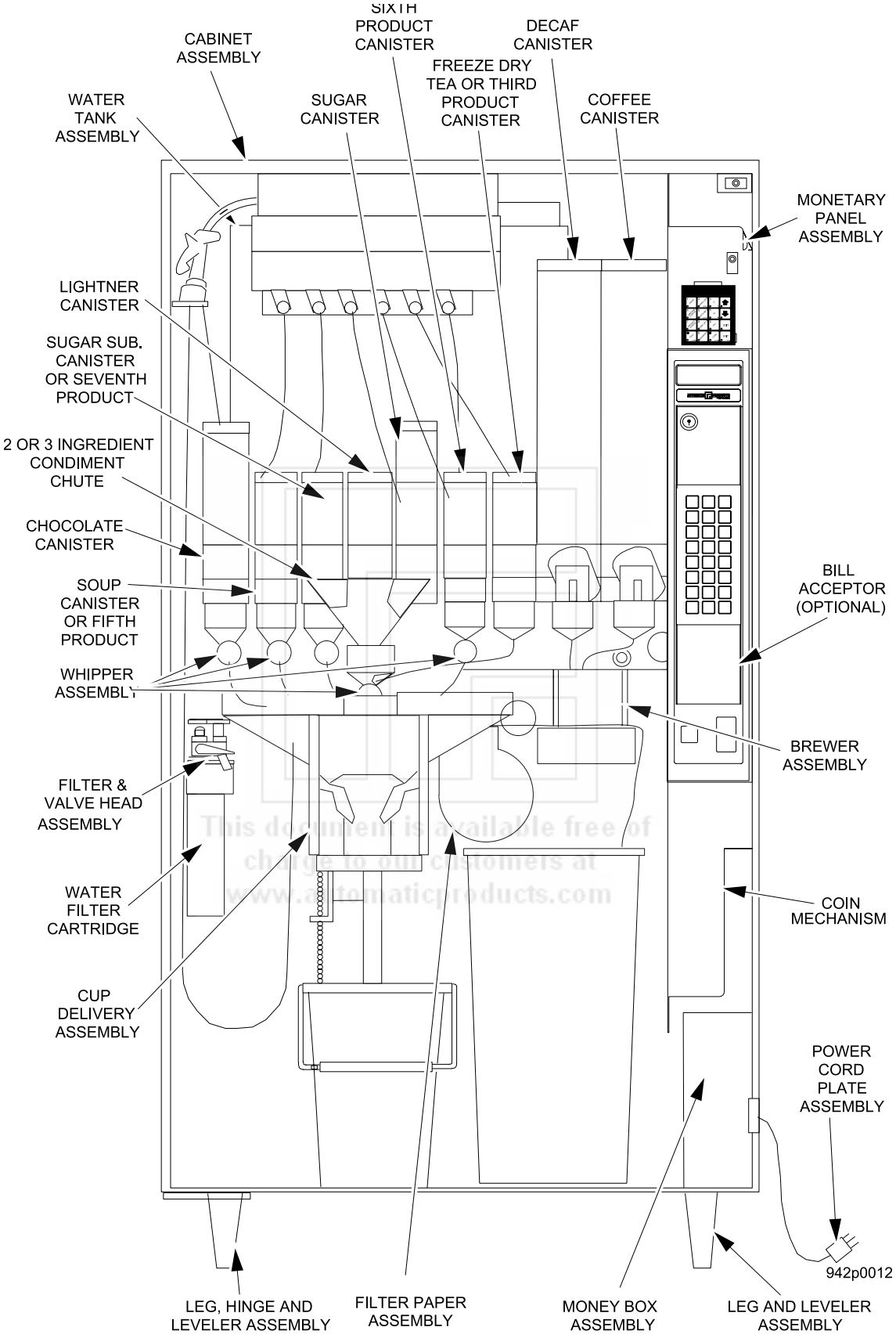


**Cabinet Assembly Interior - Figure 1**

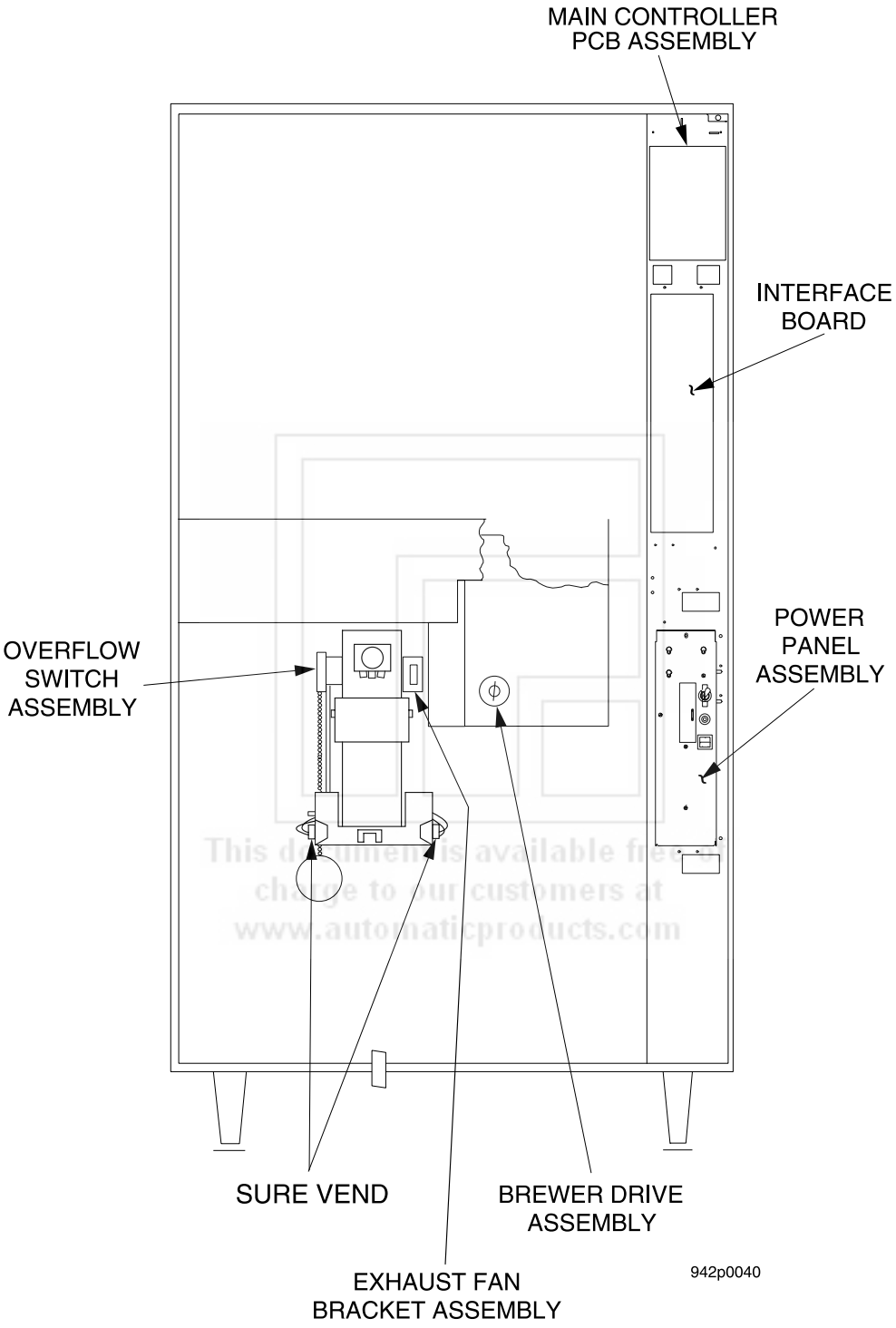


This document is available free of charge to our customers at www.automaticproducts.com

**Cabinet Assembly Interior - Figure 2**

# Controls and Indicators

**Power Panel**. You may have one of three power panels, depending upon where you live. The controls are fundamentally the same, however.

**Circuit Breakers and Fuses.** Circuit breakers and fuses protect the merchandiser against failures in the power supply or any of the electrical components. If a circuit breaker trips and cannot be reset, or if a fuse repeatedly blows, contact your AP Distributor or AP Product Support.

**Back Side of Power Control Panel.** The circuit board mounted on the rear of the power control panel is a DC power supply for the coin mechanism. A fuse protects the board circuitry in the event of a coin mechanism solenoid failure. If the coin mechanism is not working, check this fuse. If the fuse is blown, a bad coin mechanism solenoid could be at fault.

**Main Power Switch.** This is the main ON/OFF switch for the merchandiser.

## WARNING

**To protect against electrical shocks and possible damage to the machine, turn this switch OFF when performing any maintenance on the merchandiser.**

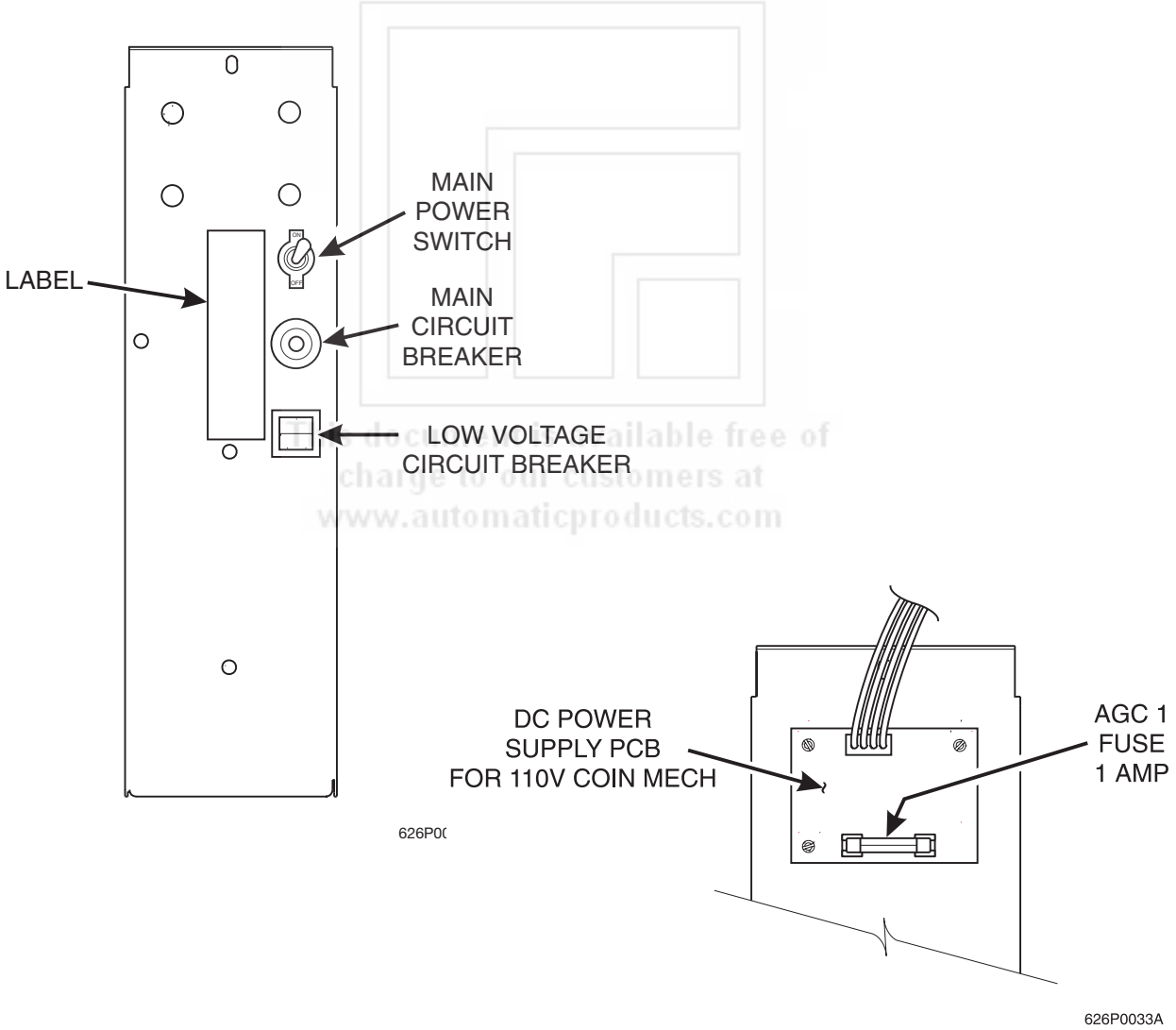


Manuals are available free of charge to our customers at www.automaticproducts.com

**Power Control Panel Front and Back Views**

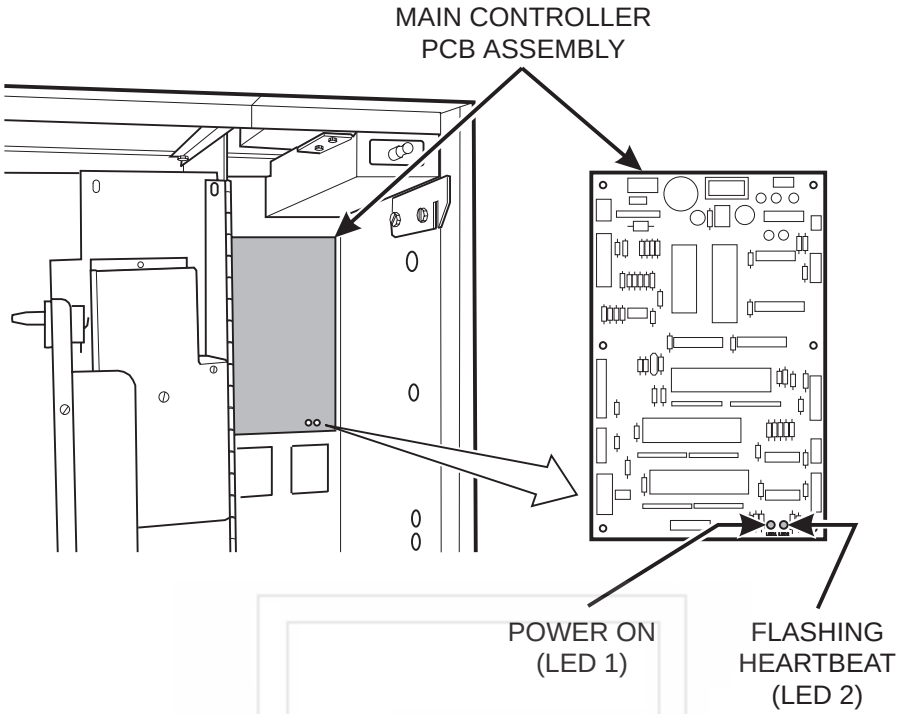


**Main Controller PCB Display**

**Main Controller PCB Display**

This display consists of two light emitting diodes (LEDs) mounted on the controller PCB.

| | |
|---|---|
| **POWER ON (LED 1)** | When lit, this red LED indicates electrical power is applied to the controller PCB. |
| **HEARTBEAT (LED 2)** | When flashing, this red LED indicates that the controller PCB is active, and the software is operating. |

This document is available free of charge to our customers at www.vendingparts.com

**NORMAL CONDITIONS:**

When the merchandiser is operating normally, you should see a steady red **POWER ON** indicator. The red **HEARTBEAT** indicator should be flashing with a balanced on/off pattern (on for the same length of time that it is off).

**ERROR CONDITIONS:**

If an error is present, the red **HEARTBEAT** indicator will flash with an unbalanced on/off pattern (on longer than it is off). The error(s) can be viewed under the DIAGNOSTICS mode.

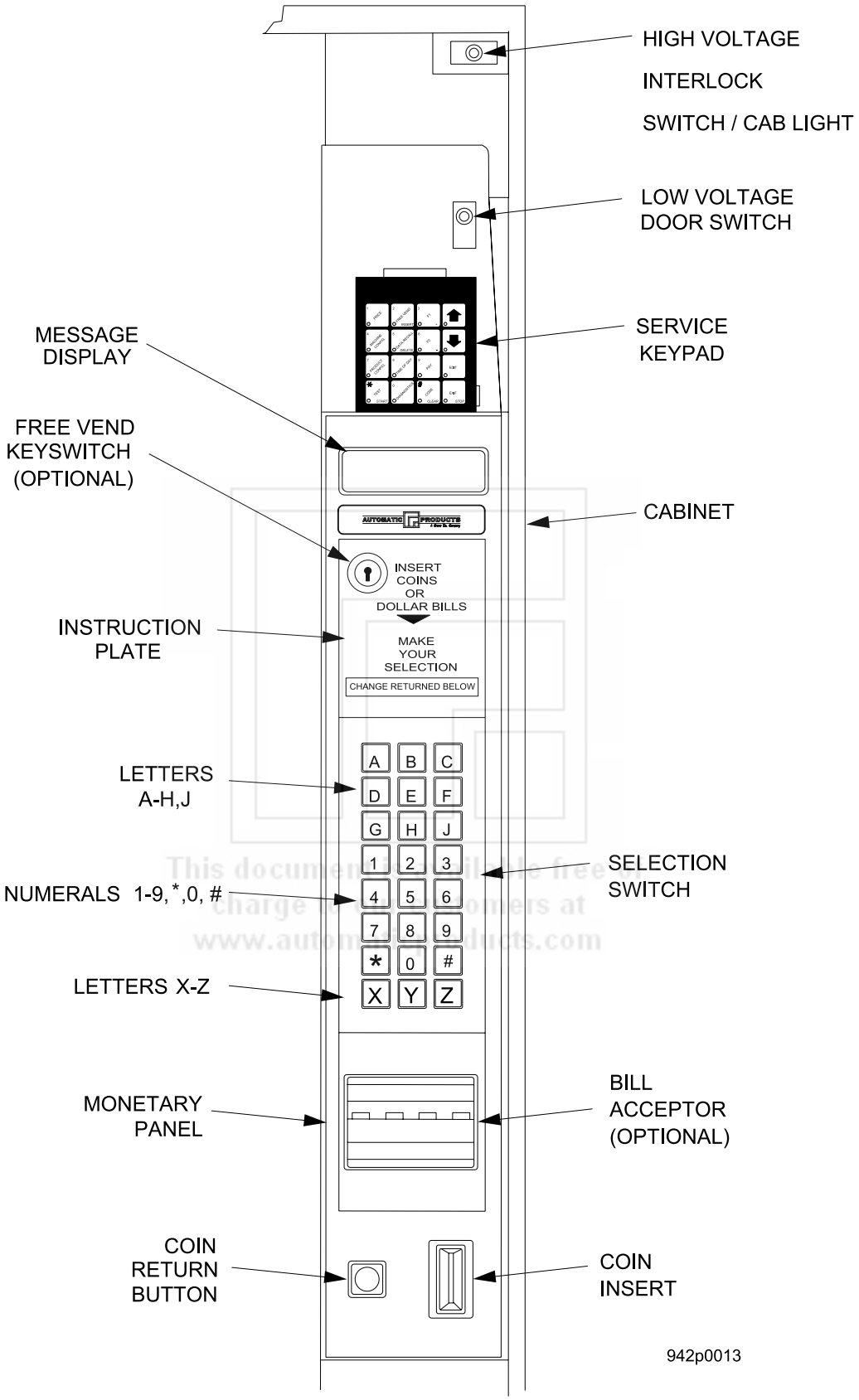


**Monetary Panel**

**High Voltage Interlock Switch.** When the cabinet door is open, this switch turns off the optional fan and bean light (if so equipped) and turns on the service light.

**Low Voltage Door Switch.** Informs the controller software of the main door open or closed status.

**Message Display.** This is how the merchandiser communicates with the outside world. Customers can see messages about how much money they have put into the merchandiser. The message display also tells customers when a selection is sold out and when vending is free, inhibited, or discounted. The message display shows you what you are doing when you program the merchandiser, and can show you what is wrong if there is a failure.

**Free Vend Keyswitch.** This allows someone (other than maintenance people) to set the merchandiser to free vend without opening the door.

**Selection Switch Panel.** The customer uses these switches to make selections. Also, maintenance people may use this switch panel during programming and other support modes.

**Coin Return Button.** Pressing this button returns any coins that have been paid into the merchandiser prior to a vend.

**Bill Acceptor (Optional).** Accepts bills in various denominations, depending upon the type of bill validator, and how the machine is configured.

**Service Keypad.** The service keypad is located at the top of the monetary panel. It gives service personnel the means to program, retrieve data from, and view diagnostic information about the merchandiser.

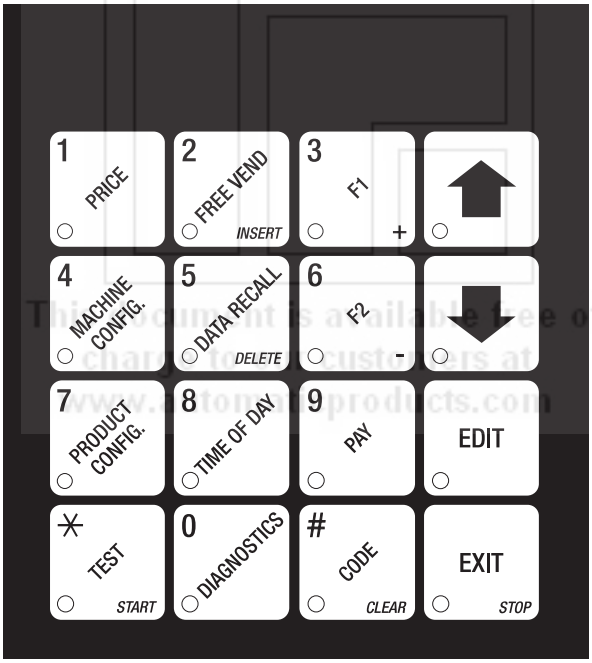


**Service Keypad**

This document is available free of charge to customers at www.automatedproducts.com

# Initial Set-up

## Location Preparation

After your machine is unpacked and placed near its permanent location, you need to make sure you have the proper electrical and water service.

This merchandiser needs electrical power as shown in the following table.

**NOTE**

Each merchandiser should have its own electrical circuit.

**Power Requirements**

| Country | Volts | Frequency (Hz) | Current (Amps) |
|---|---|---|---|
| Canada | 115 | 60 | 16 |
| United States | 115 | 60 | 16 |

This merchandiser is supplied with a service cord for the country of use and is terminated in a grounding type plug. The wall receptacle used for this merchandiser must be properly polarized, grounded, and of the correct voltage. Operating the merchandiser from a source of low voltage will VOID YOUR WARRANTY. Each merchandiser should have its own electrical circuit and that circuit should be protected with a circuit breaker or fuse conforming to local regulations.

**Voltage Check** - Place the leads of a voltmeter across the LINE (LIVE) and NEUTRAL terminals of the wall receptacle. The voltmeter should indicate 110-130 volts AC for 120 volt, 60 Hz locations.

**Polarity Check** - Place the leads of a voltmeter across the LINE (LIVE) and GROUND terminals of the wall receptacle. The voltmeter should indicate 110-130 volts AC for 120 volt, 60 Hz locations.

**Noise Potential Check** - Place the leads of a voltmeter across the NEUTRAL and GROUND terminals of the wall receptacle. The voltmeter should indicate 0 volts AC. A measurement greater than 1.5-2.0 volts AC could result in problems for the merchandiser's electronic circuitry caused by electrical noise.

charge to our customers at
www.automaticproducts.com

**Any deviation from the above requirements could result in unreliable performance from your merchandiser**.

## Water Requirements

The best type of water for coffee brewing is normal hard (tap) water. If your location has chemically softened water, you should do one of the following things:

- Have a non-softened supply line run to the merchandiser.
- Contact your local water filter supplier for information and suggestions.

*Well water can also be used in the Cafforia. However, you should have it checked for levels of carbonates and alkalies. Contact your water filter supplier if these values are relatively high.*

### What is the Water Pressure at Your Location?

***It should be no less than:*** **10 psi ( 69.0 KPa) at 1/2 gallon/minute**
***And no more than:*** **80 psi (522.0 KPa) at 1/2 gallon/minute**

If you're not sure about the pressure and flow rate, check with your water company.

### What to do With the Water Supply Line

- Locate the supply line at the rear of your merchandiser.
- Equip the line with a shut-off valve.

Flush the water supply line before connecting it to the merchandiser. A minimum of five gallons is usually required before connecting the merchandiser to the supply line. **DO NOT** flush the merchandiser water system. If you do, you might introduce water line contaminants into the merchandiser.

## Positioning the Merchandiser

You can position this merchandiser anywhere in a bank of machines. It can even be placed on the end flush against a side wall. Be sure you leave enough room in front of the merchandiser for the door to move freely.

**Be sure the rear of the merchandiser is at least 6 inches (15 cm) away from the wall. This will allow warm moist air to be vented out of the machine's interior.**

### WARNING

**This machine is only rated for installation in an indoor location.**

## Connecting Everything

### Connect the Merchandiser to the Water Supply

1. You will need the following:

- A coil of copper tubing with outside diameter of 3/8 inch (9.5 mm) or greater. The appropriate plastic tubing may be substituted. The tubing must be long enough to reach from the water source to your machine with enough left over to form a loop about 2 feet (60 cm) in diameter. This will allow you to move the machine without straining the water line.
- A 3/8 inch (9.5 mm) flare fitting.

2. Connect the merchandiser to your water supply.

This document is available free of charge to our customers at www.automaticproducts.com

### Connect the Merchandiser to the Electrical Power Supply

Power inside the merchandiser is controlled by the main power switch, located on the power panel.

1. Make sure the main power switch is OFF.
2. Connect the merchandiser's power cord to your wall outlet.

# Final Mechanical Preparation

## Level the Merchandiser

Using a spirit level, adjust the front and rear leg levelers until the machine is level from side to side and back to front.

## WARNING

**Do not move the cabinet while hex head screws and/or carriage bolts are loosened. The cabinet would become unstable and likely to tip and cause injury.**

## Mount the Base Plate

1. Remove the pail(s) from the inside of the merchandiser.
2. Remove the floor liner from the inside of the merchandiser.
3. Remove the two caps as shown.
4. Loosen the left leg assembly carriage bolts and nuts to allow mounting a base plate bracket.
5. Secure one of the base plate brackets to the leg assembly using the two carriage bolt. Tighten the carriage bolts and nuts.
6. Loosen the right leg assembly hex head screws to allow mounting the other base plate bracket.
7. Secure the other base plate bracket to the right leg assembly using the two hex head screws. Tighten the hex head screws.
8. Insert the short arms of the slides into the hinged tabs of the base plate. Position the slide so the notch near the short arm is on the bottom side.
9. Insert the long arms of the slides into the base plate brackets.
10. Insert and secure a cotter pin through the hole in the back of each of the slides.
11. Push the base plate toward the merchandiser cabinet. The front tabs of the base plate brackets should seat in the notches in the long arms of the slides.
12. Replace the caps, liner, and pail(s) removed previously.

Manuals available free of charge to our customers at www.automaticproducts.com

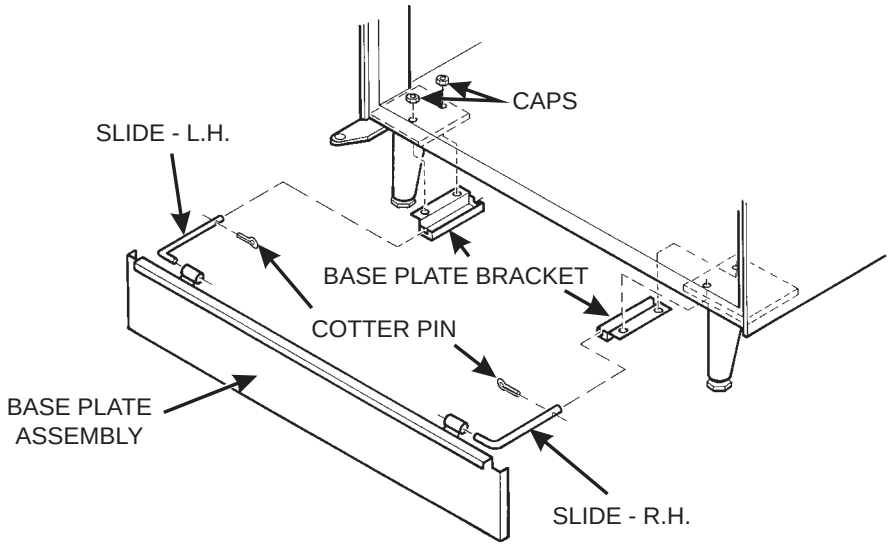

## Set Up the Menu Assembly

**Menu Panel:**

1. Open the door
2. Swivel the cup turrets away from the door.
3. Remove the shipping screw as shown, and extract the menu cover assembly.
4. Install selection inserts into the menu panel.
5. Reinstall the menu cover assembly by inserting the three tabs into the slots and tilting forward, using the magnets for retention. The shipping screw may be omitted from re-assembly, if desired.

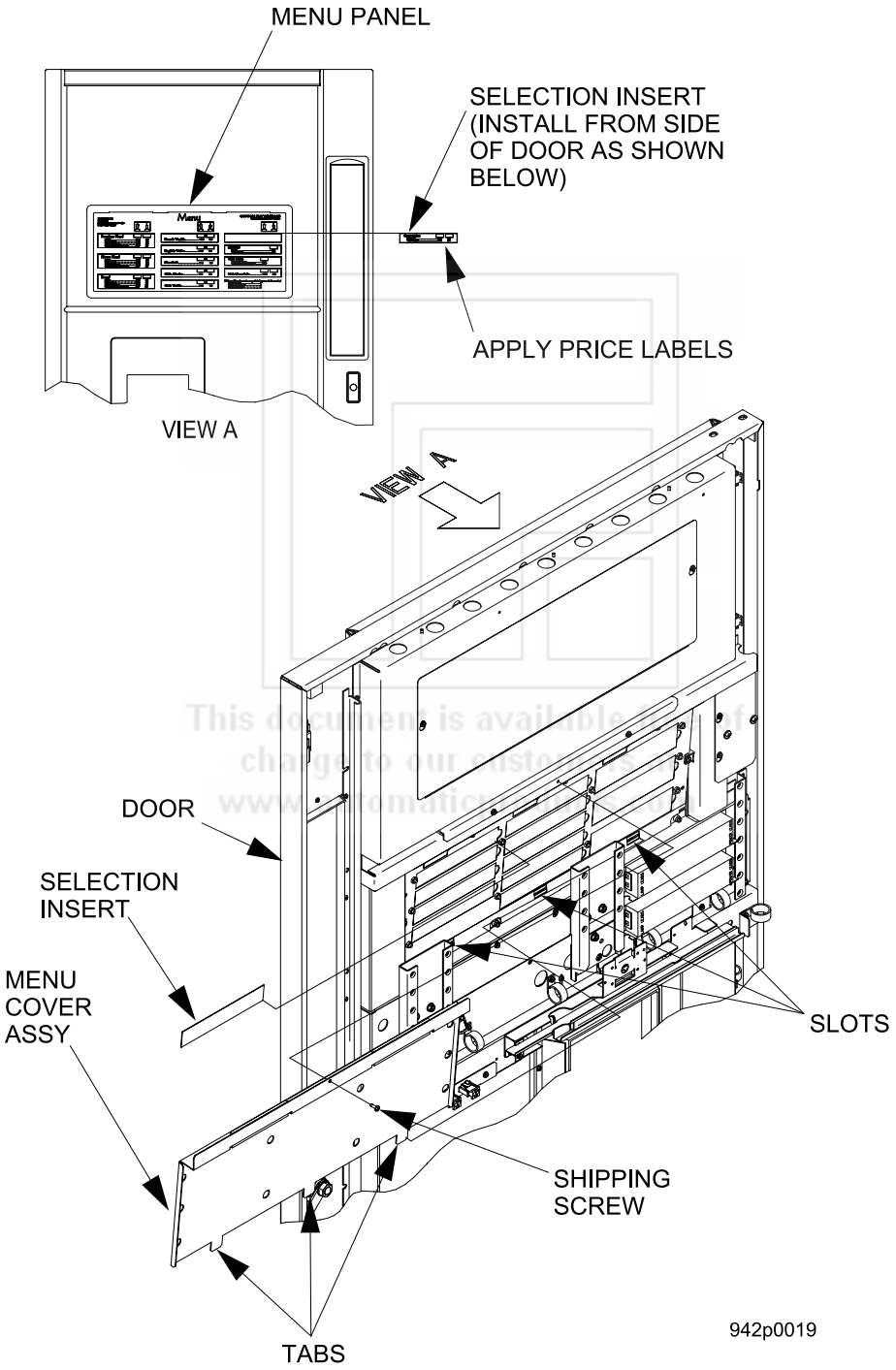

## Install the Water Filter Cartridge

IF YOUR MERCHANDISER HAS THE WATER FILTER OPTION, IT CANNOT BE OPERATED WITHOUT A PROPERLY INSTALLED WATER FILTER CARTRIDGE. If you do not have the water filter option, continue with "Fill the Tank."

**Cuno Brand**:

**NOTE**

Check the water filter installation record. There is a place to write the vend number on the cartridge. The cartridge is effective for a maximum of 64,000 7 oz. vends, 56,000 8 oz. vends, 50,000 9 oz. vends, or 37,000 12 oz. vends. Local conditions may require more frequent replacement.

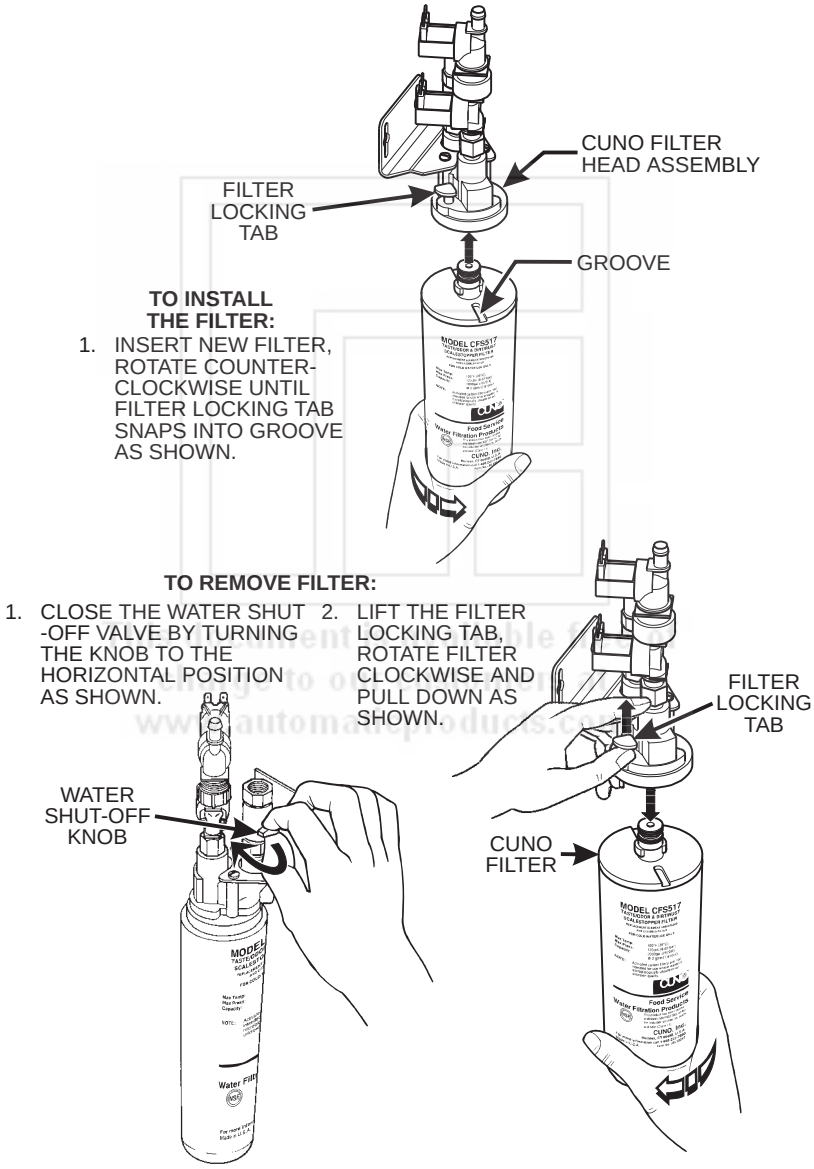

**Everpure Brand**:

**NOTE**

Check the water filter installation record. There is a place to write the vend number on the cartridge. The cartridge is effective for a maximum of 26,000 7 oz. vends, 22,000 8 oz. vends, 20,000 9 oz. vends, or 15,000 12 oz. vends. Local conditions may require more frequent replacement

Automatic Products recommends that you do the following procedure the **first** time you fill the tank in your merchandiser:

1. Remove the small inner "O" ring from the filter cartridge.
2. Install the filter cartridge.
3. Turn on the water at its source, and perform the tank filling procedure.
4. Turn off the water at its source, remove the filter cartridge, and replace the "O" ring.
5. Install the filter cartridge.

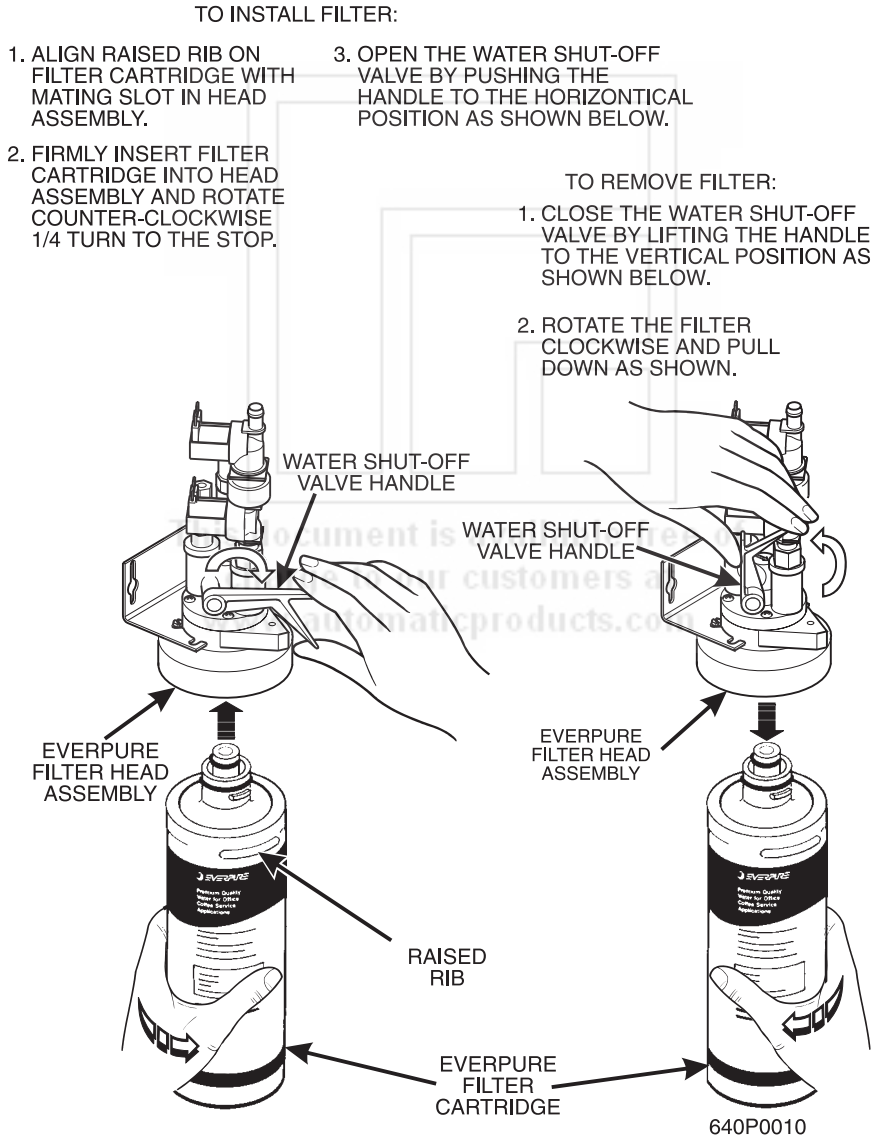

**Hydrolife Brand:**

**Installation**

1. Place the filter inside the canister. Be sure the o-ring is seated in the canister just below the threads.
2. Screw the canister and filter assembly onto the filter head until it comes to a stop.
3. Open the water valve on the inlet line by rotating the handle to the vertical position as shown.

**Removal**

1. Close the valve on the inlet line by rotating the handle into the horizontal position as shown.
2. Relieve water pressure by performing two or three water throws (see "Collecting Hot Water Throws" on page 62).
3. Unscrew the filter and canister assembly from the filter head. Remove the filter from the canister.

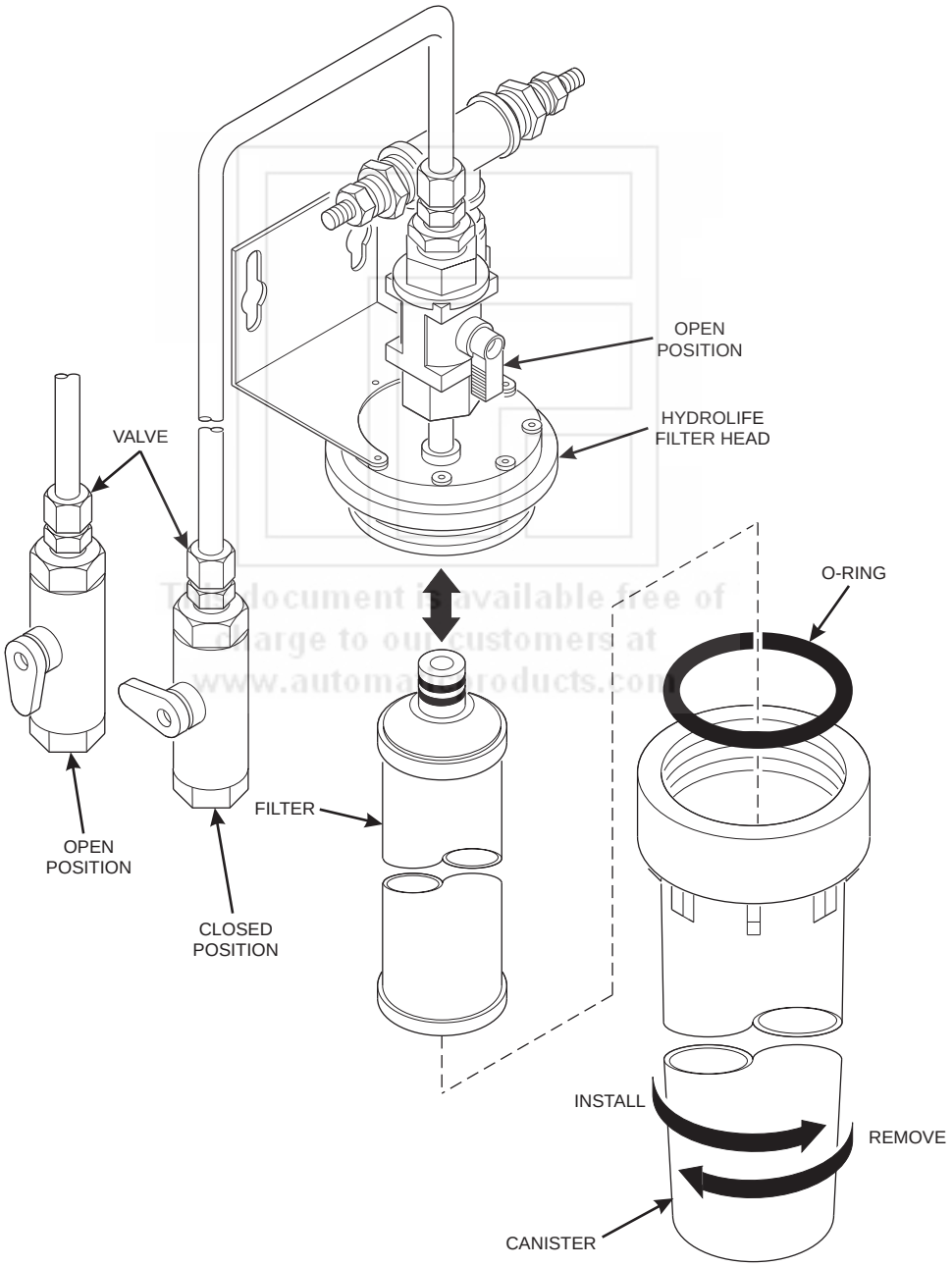


This document is available free of charge to our customers at www.automatedproducts.com

## Load the Optional Filter Paper

1. Turn the fastener $^1/_4$ turn counterclockwise and remove the filter paper cover.
2. Insert filter paper in the filter paper housing as shown.
3. Feed the paper out of the housing as shown by the arrows molded into the back wall of the filter paper housing.

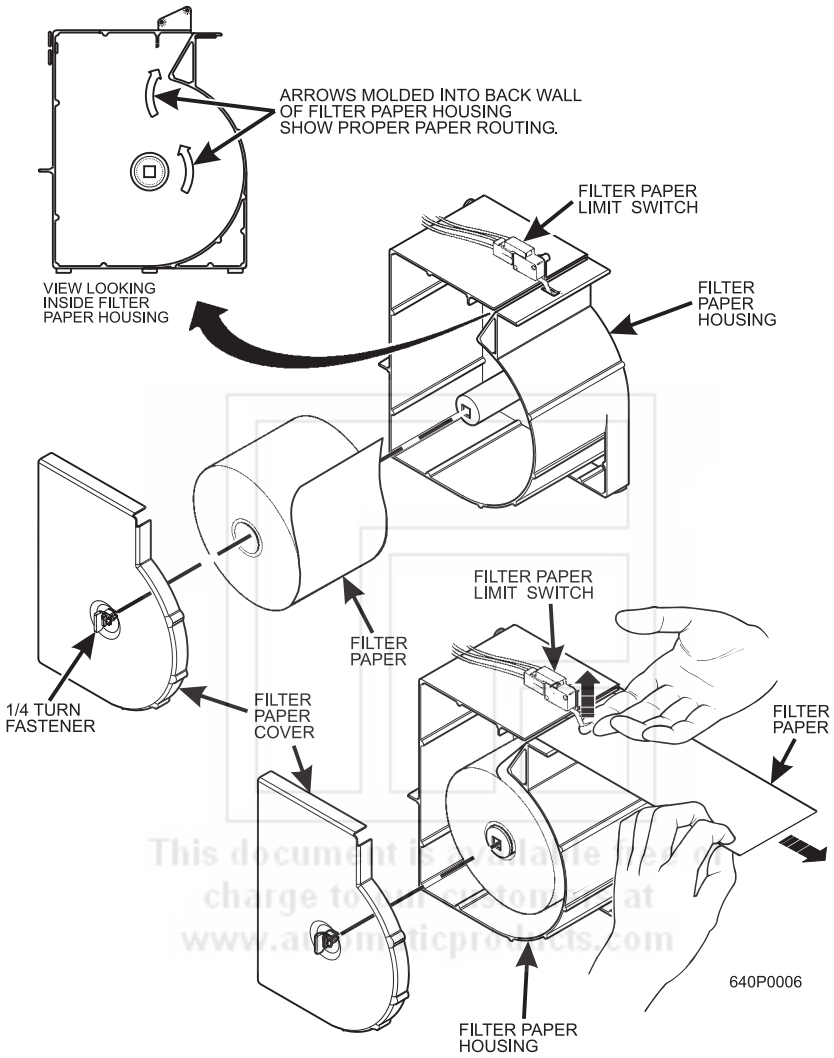


4. Lift up the limit switch and feed the paper past it as shown. Release the limit switch.
5. Replace the cover.
6. Refer to routing label on filter paper cover. Feed paper under paper guide shaft and over rounded edge of stainless steel brackets as shown.
7. Lift and rotate the idler roller assembly up.
8. Route the paper under the brewer cylinder and the idler rollers.
9. Release the idler roller assembly, capturing the filter paper.
10. Route the paper into the grounds bucket.

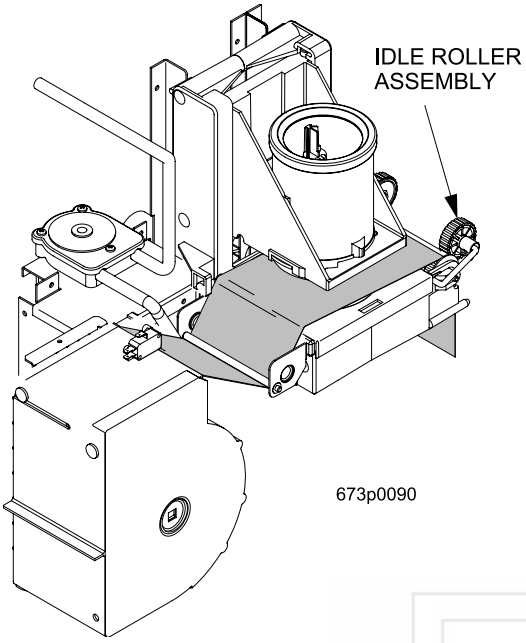


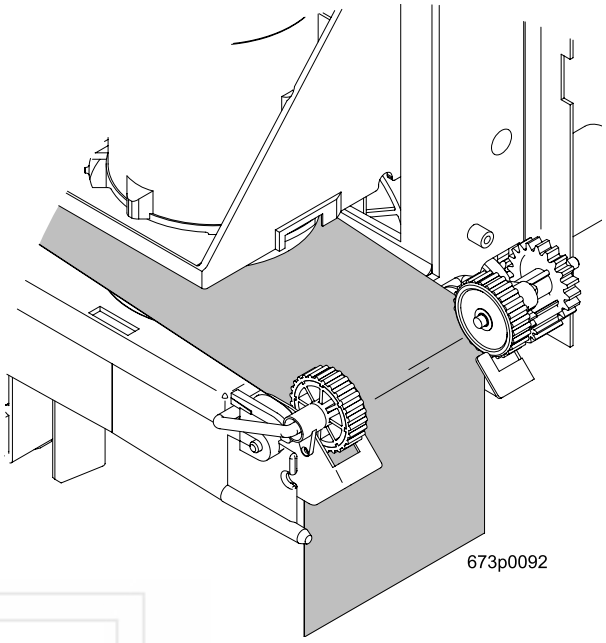


## Install the Optional Coin Box Lock

1. Install the lock cylinder, washer, and nut in the order shown.
2. Tighten the nut.
3. Install the lock bar as shown, and secure with the screw.

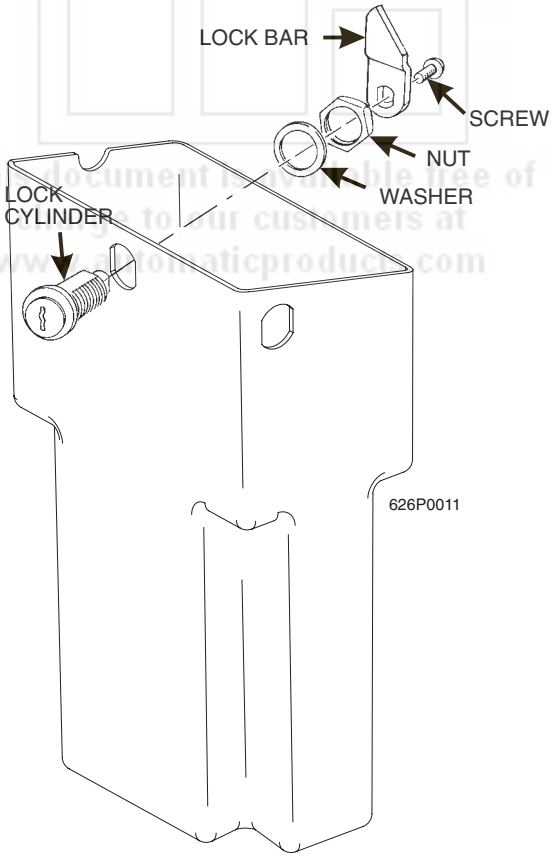


This document is available free of charge to our customers at www.automaticproducts.com

## Load the Coin Mechanism

1. Open the cabinet door and the monetary door.
2. Insert coins into their respective tubes until each tube has been filled.
3. Inspect the tubes for shingled coins and correct if necessary.

## Fill the Tank

1. Make sure the main power switch is ON.
2. Turn on the water at its source.
3. On the maintenance keypad, press

, then press
until the display shows **TANK.FILL** .
4. Press

. You should hear water running into the tank, and the display will show **FILLING** .
   The water will run until either the tank is full or 12 minutes go by, whichever happens first.

**NOTE**

The inlet water valve only stays open for 12 minutes at a time. This is a safety feature to prevent water from running into a leaky system and making a mess. It is possible for your tank to take longer than 12 minutes to fill if your location has low water pressure. To be on the safe side, check for leaks if the water runs a long time. If you find none, everything is normal; you just have low water pressure.

5. When you hear the water stop running, repeat steps 3 and 4. Under normal circumstances, nothing will happen. If water starts running and the display shows **FILLING** again, your pressure is low and it is just taking a long time to fill the tank. Repeat this step if necessary to be sure your water tank is full.

## Fill the Canisters

Open the lid as shown, and carefully pour the appropriate product into the canister. Repeat for all canisters in the machine.

This document is available free of charge to our customers at www.automaticproducts.com

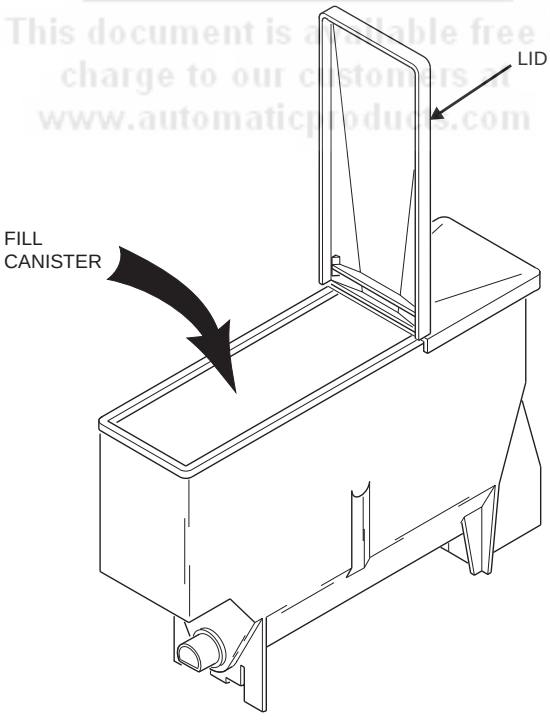

## Load Cups

**CAUTION**

Use only cups which have been designed for use in a hot beverage vending machine.

1. Support the cup mechanism in the upright position.
2. Push the latch forward to release the cup mechanism. Continue to support the cup mechanism while you lower it into the loading position.
3. Remove the turret cover.

**OBSERVE PROPER HYGIENE - DO NOT TOUCH THE CUPS!**

4. Open the bottom of the wrapper on a stack of cups.
5. Insert the wrapped cups into the turret and pull the wrapper out.

**CAUTION**

Do not fill cups above the level marked on the outside of the cup turrets or above the "fill line" label inside each turret, or motor jams will occur. Use only the same size and brand of hot drink cups in each turret; do not intermix!

6. Replace the turret cover after the turrets have been loaded.
7. Be sure the cup mechanism is locked into the upright position.

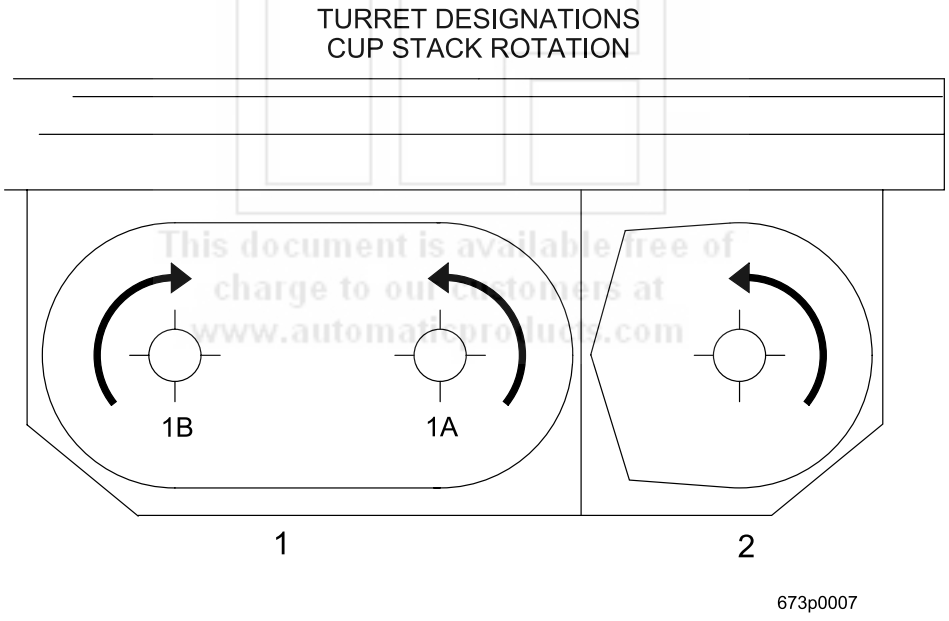


This document is available free of charge to our customers at www.automatedproducts.com

**Cup Loading - Figure 1**

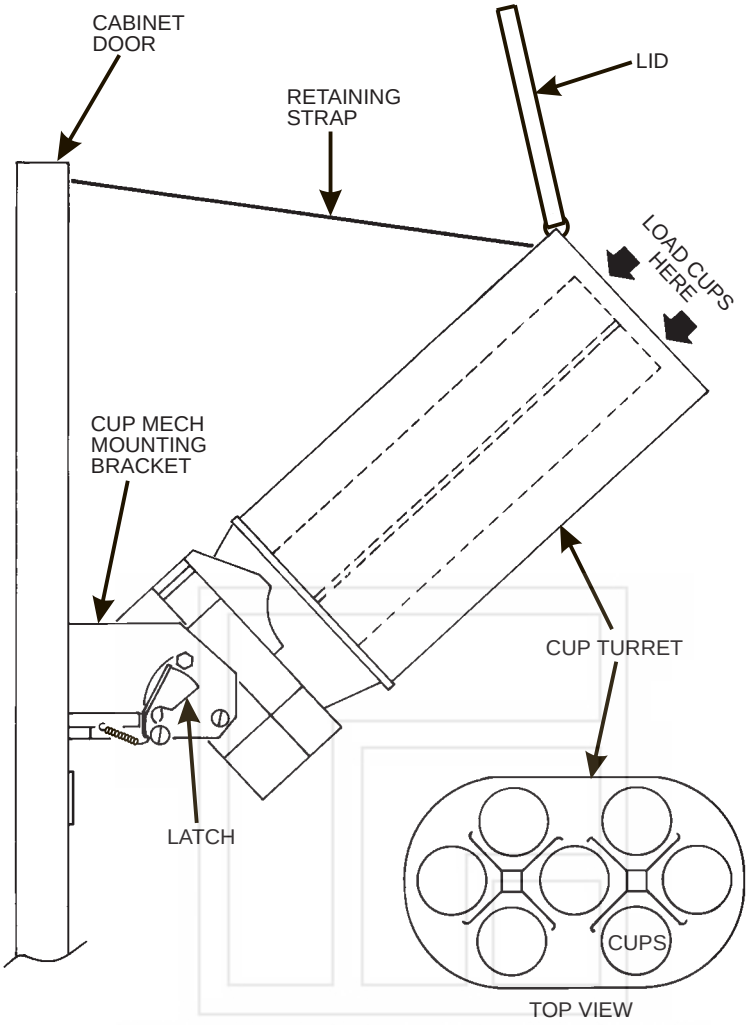


**Cup Loading - Figure 2**

This document is available free of charge from various sources at www.automaticproducts.com

## Tell the Machine About the Cup Size(s)

Make sure the cup sizes you select agree with the cups you have actually loaded during setup.

1. Press 7 PRODUCT CONFIG. the display shows **X. OZ Y.** "X" is the currently selected drink size for the cups in turret 2 (normally large cups), "Y" is the currently selected drink size for the cups in turrets 1A and 1B (normally regular cups).
2. Press 1 PRICE to change the #1 cup ring sizes; press 2 FREE VEND INSERT to change the #2 cup ring sizes.
3. Any changes made to the cup sizes must be "locked in". There are two ways to do this:
4. If you are keeping some cup sizes the same, or putting the cups in different cup rings, press and hold TEST START. The display momentarily shows **CLEARING**, two beeps sound, then shows **FINISHED**. This will reassign the old throw times to the new cup ring, if possible.

5. If you are loading all different size cups, or want to load all new default times, press and hold

. The display momentarily shows **CLEARING**, two beeps sound, then shows **FINISHED**. This will reload the factory default times for all cup sizes, clearing any custom throw times you have established. (See the tables on the following pages for the factory default times.)

## Test the Machine

Your Cafforia is now ready to vend coffee, just as soon as the water in the tank reaches its operating temperature. Press

, and a reading of the tank temperature is displayed. When the display shows 202° F (94° C), it is ready for vending.

1. Close the door, make a selection, and enjoy your cup of coffee!
2. You will now need to do the following before your machine is ready to start earning money:

- Set prices
- Set up the menu
- Establish time of day vending periods (if desired)
- Customize the drink recipes (if desired)
- Set up custom messages (if desired)

Refer to the ***Programming Section*** for details on these and other procedures.

This document is available free of charge to our customers at www.automaticproducts.com

# Adjustments and Minor Maintenance

This section contains procedures not normally used during setup, but may come in handy later on.

## Water Valve Adjustment

Water valves do not usually require adjustment, but in some cases adequate water volume cannot be achieved by the throw time setting alone (see "Collecting Hot Water Throws" on page 62). **IF ABSOLUTELY NECESSARY**, adjust the valves in conjunction with setting the factory default timers during the product configuration programming mode.

1. Using a slotted screwdriver, turn the adjustment screw clockwise to decrease the water flow rate.
2. Turn the adjustment screw counterclockwise to increase the water flow rate.

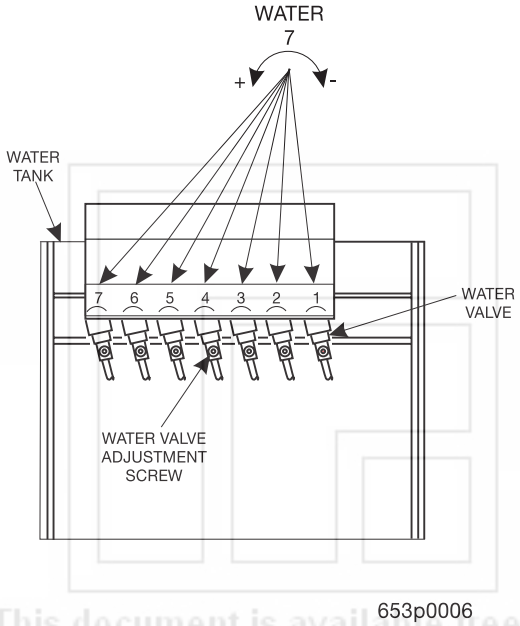


653p0006

This document is available free of charge to our customers at www.automaticproducts.com

## Cup Mechanism Adjustment

1. Place seven cups in the cup ring.
2. Observe the clearance as shown in View B.
3. If necessary adjust by first loosening the adjustment arm screw (View A).
4. Move adjustment arm until correct clearance is achieved.
5. Hold adjustment arm in place and tighten adjustment arm screw.

**View A**

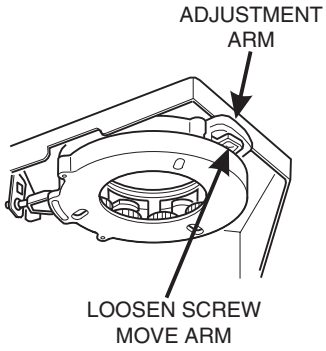


**View B**

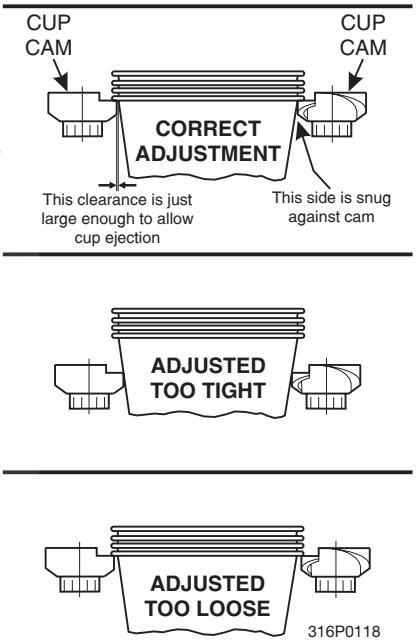


This document is available free of charge to our customers at www.automaticproducts.com

# Grinder Adjustment

## Static ZERO Adjustment for Mini-Grinder

If brewed coffee becomes weaker or a variation in strength is detected after a period of time and the gram throw, water temperature, etc. seems normal, it may be time to adjust thedistance between the grinder plates. In order to maintain the consistency of the grind and the gram throw, a periodic zero adjustment may be needed for the best brewing results. Brewing efficiency can be regained by zero adjusting the grinder as outlined in the following steps;

1. Slide the gate on the bean hopper to prevent beans from entering the mini-grinder.
2. Empty the mini-grinder of beans and ground coffee. Grinder must be completely empty of beans before the zero adjustment can be performed. Completely empty the grinder of beans by following:
   a. Depress the test key.
   b. Depress the down arrow until display shows "**Grind Test**".
   c. Remove mixing bowl.
   d. Hold cup under the grinder chute to catch the grounds and then press the "1" key to run the grinder on the right or the "2" key to run the grinder on the left. Continue pressing the "1" or "2" key until no more coffee grounds are dispensed.
3. After the mini-grinder is empty, remove the locking device (pointer) & the locking screw from the top face of the fixed cutter head by removing the two screws and washers.

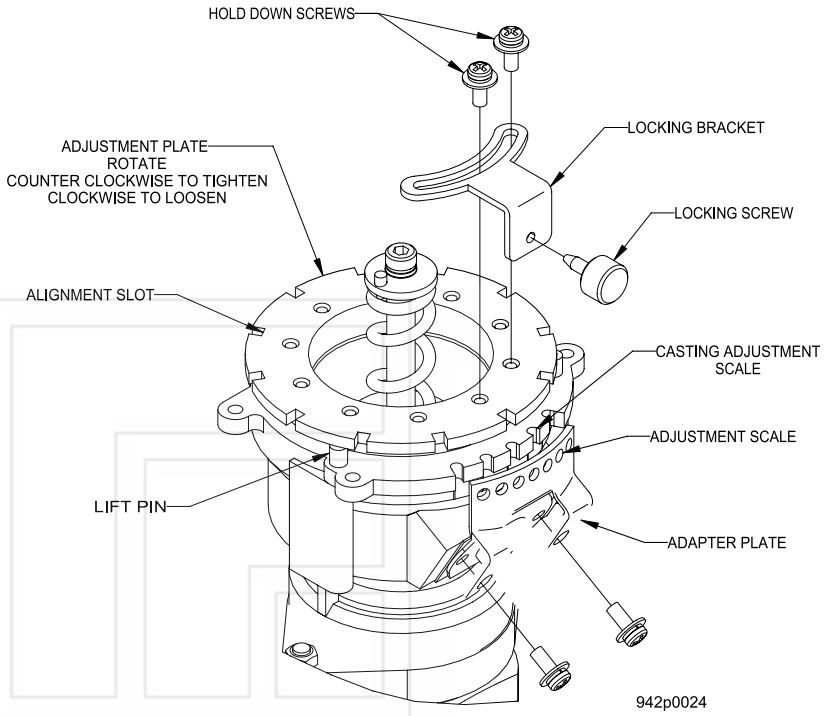


This document is available free of charge to our customers at www.automaticproducts.com

4. Turn the fixed cutter head of the mini-grinder counterclockwise until hand tight.
5. Observe the relationship of the three spring-loaded lift pins and how they align with the ten slots on the outer edge of the fixed cutter head. If any of the three pins are aligned with any one of the 10 slots, skip to step 7).
6. If none of the pins are aligned with any of the slots, slowly loosen the fixed cutter head clockwise until one pin is centered in any one of the ten slots on the outer edge of the fixed cutter head - proceed.
7. Continue turning the fixed cutter head clockwise until three more clicks of any pins become centered in any one of the ten slots. This should be the forth time a pin is centered in a slot. This is the #1 grind position and the finest grind the grinder should ground.

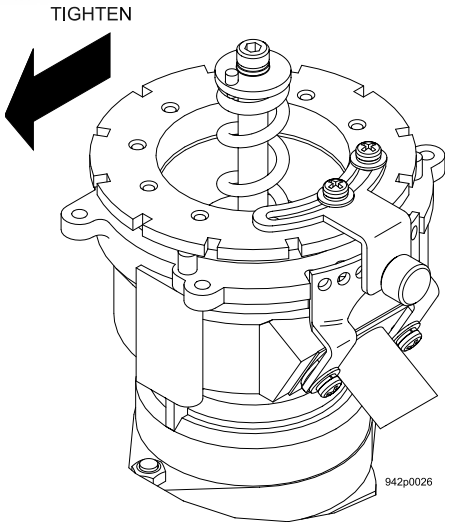

8. Reinstall the locking device removed in step 3 with the locking screw in the far right hole position on the adjusting scale (see Figures on this page and on previous page). Tighten the two screws securing the locking device to the top of the fixed cutter head.

9. Move the locking screw to the center hole position on the adjustment scale. The adapter plate has 7 holes and the #4 hole will be the center position. Tighten the locking screw.

10. Open the slide gate to allow beans back into the grinder. Test run the coffee selection three times to refill the grinder.

11. It is **IMPORTANT** that the gram throw is checked after the ZERO adjustment is performed. Follow instructions outlined in "Collecting Dry Product Gram Throws" on page 59.

12. Upon gramming, replace mixing bowl and run three test vends of the coffee type in this grinder. If the brew cycle seems normal and has acceptable dry spent grounds, leave the locking device in its current position. If the grind setting is changed by moving the adjustment thumb screw, re-checking the gram throw will be necessary.

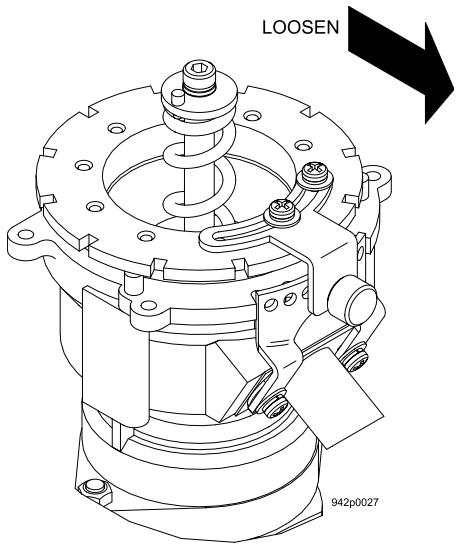


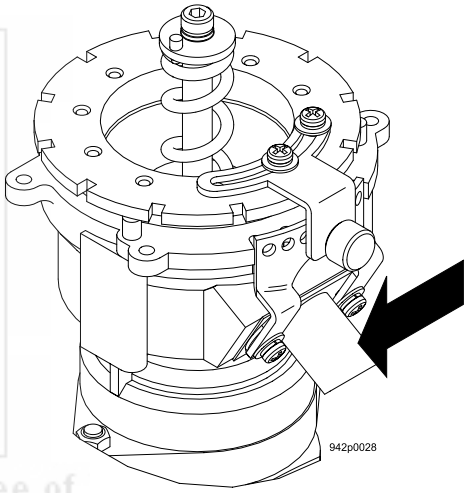


This document is available free of charge to our customers at www.automaticproducts.com

## Canister Installation

1. Place the canister in position as shown.
2. Engage the pins on the motor shaft with the slots in the canister coupler.
3. Fit tabs on canister into the slots on the canister shelf.
4. To ensure canister is correctly engaged with the rear mounting bracket, gently push down on the front edge of the canister lid.
5. **Canister Caps.** The parts bag contains a number of red vinyl caps. Place these caps over the canister nozzle as shown to avoid spilling product when removing and replacing the canisters.

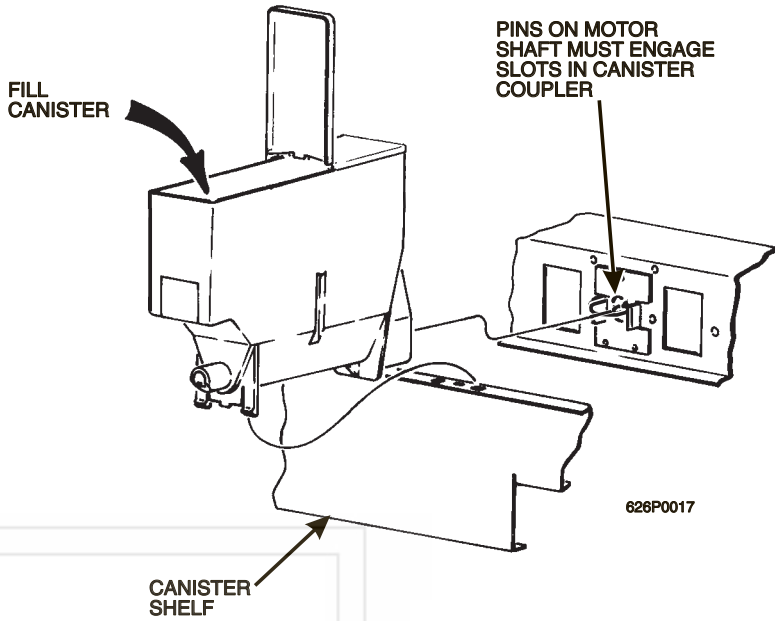


This document is available free of charge to our customers at www.automaticproducts.com

## Servicing Fluorescent Lights

To gain access to fluorescent lights:

1. Loosen three screws and remove Upper Lamp Box Cover to access upper two fluorescent lamps.
2. Remove one screw and Center Lamp Cover to access middle fluorescent lamp.
3. Remove four screws and Lower Right Cover to access two fluorescent lamps.
4. Remove four screws and Lower Left Cover to access one fluorescent lamp.
5. Loosen three screws and remove Lower Lamp Cover to access the lower fluorescent lamp.

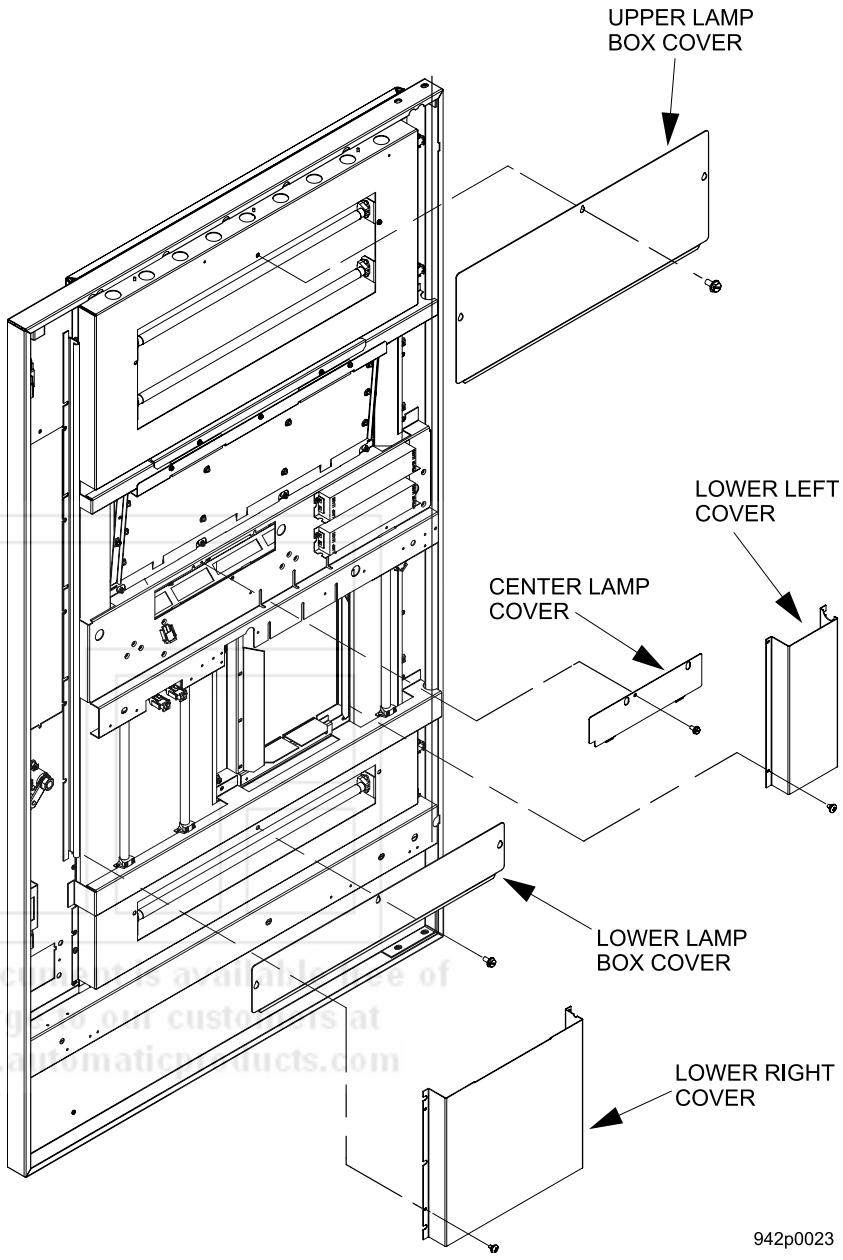


This document is available free of charge to our customers at www.automaticproducts.com

# Sanitation

## Basics

### Introduction

Anybody who services vending machines must use proper sanitizing procedures. Health regulations require that hands be clean when cups, commodities, and food-contact parts are handled or serviced.

In addition, Federal and State Health Departments require regular cleaning and sanitizing procedures for food contact parts.

The information in this section will explain how to clean and sanitize the merchandiser on a day to day basis. A clean and well maintained merchandiser will provide a better product and greater safety for your customers.

**CLEANING AND SANITIZING -- WHAT'S THE DIFFERENCE?**

Clean means "free of visible soil". In cup vending machine servicing, cleaning is also done to maintain product quality and to remove food soils, oils, and mineral stains that could affect product taste, aroma, and appearance.

Sanitizing means the reduction, to safe levels, of the number of disease-causing bacteria that remain on the surface **after** cleaning. Therefore, cleaning and sanitizing are done in separate steps, as prescribed by health regulations and good industry practice.

When you sanitize you create a healthy and hygienic condition. This leads to wholesome food, which in turn leads to satisfied customers.

**SANITIZING IS NO SUBSTITUTE FOR A GOOD CLEANING**

### How Do I Sanitize?

You can sanitize by using either of these two methods:

Chemicals: The object to be sanitized is treated with a bactericidal compound.

Heat: Raise the temperature of the object high enough to kill bacteria. Water must be at least 170° F.

Hot brew water (if available) is an acceptable sanitizer. When food contact surfaces are washed and/or rinsed, use the hot water available in the machine.

Turn the machine off before using water on the machine.

This document is available free of charge from our customers at www.automaticproducts.com

In either case, the object must be thoroughly clean and completely rinsed in order for the sanitizing process to work. Caked-on soils not removed by cleaning, for example, may shield bacteria from a sanitizing solution.

### A Good Place To Start -- Your Sanitation Kit

You need to be sure that each machine is clean, safe, and functioning when you leave it. In order to properly do this, you need to have a complete set of the right tools. In addition to the screwdrivers, pliers, and test equipment necessary to repair a machine, you need to have the tools to clean the machine.

Here is a checklist of the items needed for a good sanitation kit:

- ☐ Sanitation pail
- ☐ Tube and nozzle brushes for food contact surfaces
- ☐ Utility brush for dry spillage around canisters, etc.
- ☐ Disposable towels, wet-strength and lint-free

**NOTE**

Wiping with towels can recontaminate sanitized food-contact parts. Therefore, towels should not be used to dry food-contact surfaces. Instead, these parts should be air-dried.

- ☐ Spray detergent, diluted to desired strength
- ☐ Urn cleaner packets for coffee stains and oils
- ☐ Odor control chemicals for pails
- ☐ Replacement parts (if the exchange method is used)
- ☐ Cabinet polish or window cleaner for the outside of the machine

Feel free to add some items to this list. For example, you may want to use a portable vacuum cleaner.

## Clean the Hot Water Tank

Some smell and/or taste problems may occur in new machines. Follow this procedure to clean the hot water tank if you experience problems:

1. If the machine is in service, remove power from the machine.
2. Dissolve 1 tablespoon of common baking soda in a cup of water.

**WARNING**

**The water tank may be HOT. Be careful when working on the tank.**

3. Loosen or remove the hot water tank lid and pour the baking soda solution into the tank.
4. Apply power to the machine.
5. If the tank is not full, fill it.
6. Allow the tank to reach its operating temperature.
7. Leave the solution in the tank for ***AT LEAST*** ½ hour. If possible, leave the solution in the tank for 1 hour.
8. Drain the tank.
9. Refill the tank, then drain again.
10. Refill the tank and put the machine back into service.

Manuals available free of charge to our customers at www.automaticproducts.com

## Sanitation Procedures

Refer to the recommended cleaning and sanitation interval table on the final page of this section. For each item, complete the procedure as outlined here.

### Food Contact Parts

**NOTE**

Wiping with towels can recontaminate sanitized food-contact parts

**Ingredient Canisters** - Empty and wash the canisters, augers, and spouts. Sanitize with hot water and allow to air dry completely before returning to cabinet.
**Mixing Bowls** - The inside of all mixing bowls can be rinsed by performing the "Bowl Rinse" operation as outlined in the Programming section of this manual.
If needed, remove mixing bowls from the dry ingredient shelf. Wash the mixing bowl lids and sanitize with hot water. Allow to completely air dry before reassembling.

**Whipper Lids and Impellers** - Remove lids and impellers from the whipper housings, wash the lids and impeller housing. Sanitize with hot water and allow to air dry before reassembling.
**Beverage Discharge Nozzles** - Disconnect the beverage dispensing tube from the nozzles. Remove the nozzles from the mounting bracket. Remove the cap from the nozzle, wash clean and sanitize the nozzles and cap. Refer to the tubing connection diagram for proper routing.
**Brewer and Brewer Funnel** - The tubing and brewer may be sanitized by performing the BREW RINSE operation as outlined in the programming section. The machine features an automatic brewer sanitizing feature also described in the programming section.
At times, it may be necessary to wash and sanitize the individual brewer parts. If so, disconnect the tubes from the brewer funnel. Remove the brewer barrel from its support. Remove the brewer funnel assemblies.
Thoroughly wash all parts using soap and water. Sanitize by rinsing thoroughly with hot water.
**Coffee Chutes** - Remove the metal chute(s), wash clean, and sanitize by rinsing with hot water. Air dry before reinstalling.
**Condiment Chute Assembly** - Remove the condiment chute and cover from the condiment canisters. Thoroughly wash all parts using soap and water. Sanitize by rinsing thoroughly with hot water.

### Non Food-Contact Parts

**Cup Delivery Compartment** - Remove the compartment from the merchandiser. Wash clean and rinse with hot water.
**Exhaust Fan Filter** - Remove the filter from its housing. Wash with soap and water, rinse, wring dry, and replace into housing.
**Waste Pail** - Empty, wash, and rinse with hot water. Sprinkle detergent powder in the bottom of the pail to help control odors.
**Ingredient Rinse Tray** - Remove product canisters. Wash and rinse with hot water. Allow to air dry.

## Brewer Cleaning

The brewer has two main parts you can remove: the brew barrel and the funnel screen and seal assembly. You can remove them with the brewer in the machine, or the entire brewer can be removed as one unit.

1. On the left side of the brewer, cut off and discard the filter paper (not required for paperless).
2. Grasp the top of the brew barrel, and turn it counter-clockwise ¼ turn to the right as shown. Lift straight up and remove
3. Remove the hose from the bottom of the funnel screen and seal assembly.
4. At this point, you can remove the brewer or leave it in the machine.
5. To remove the brewer, tilt the latch down and swivel the brewer up and out.

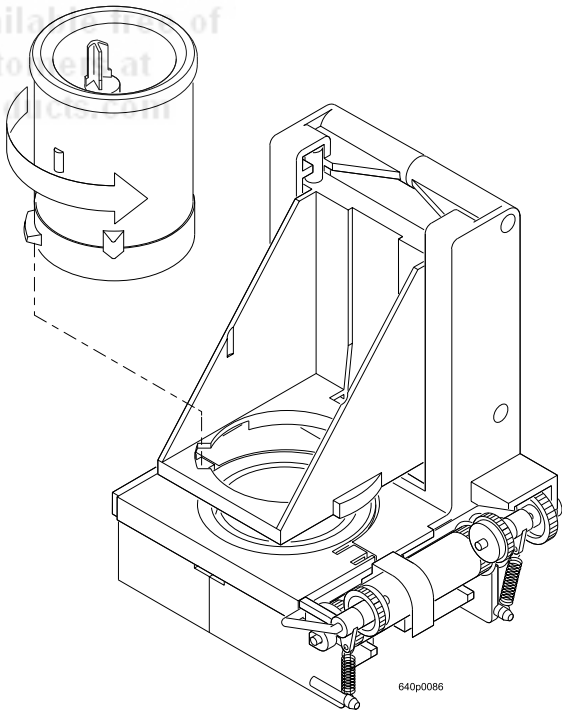

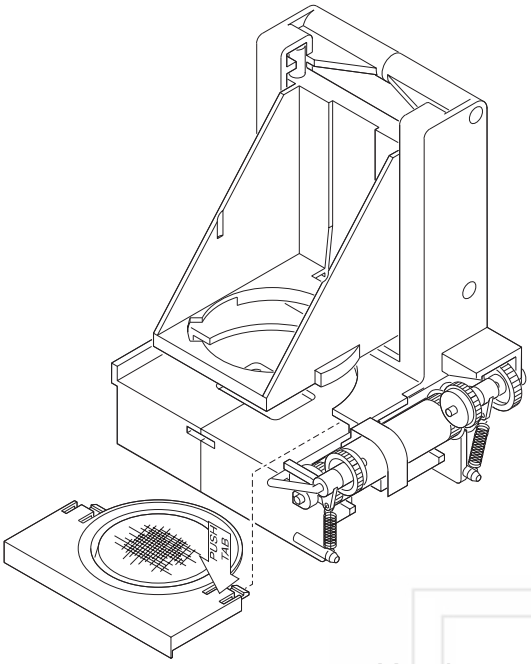


**Brewer Assembly w/Paper**

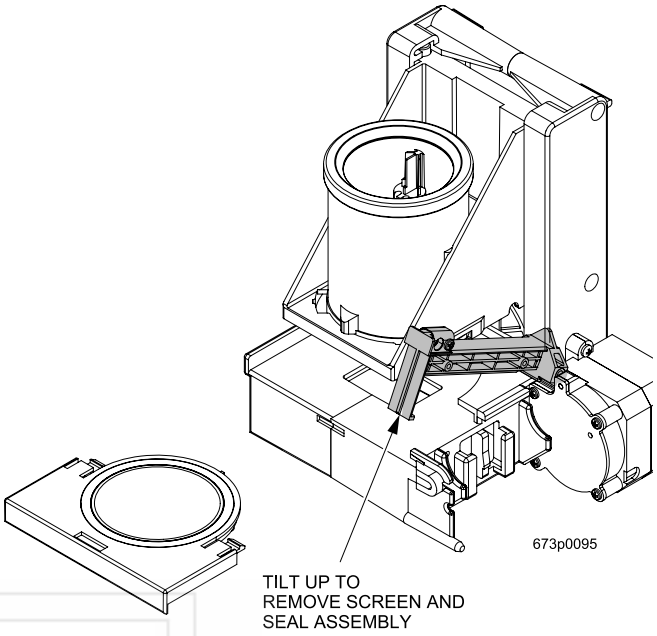


**Paperless Brewer Assembly**

6. Remove the screen and seal assembly as shown:
   a. Press down on the tabs with your fingers, and slide straight back.
   b. Lift straight up and pull out.
7. Thoroughly wash all parts using soap and water. Sanitize by rinsing thoroughly with hot water. Air dry, or blow dry with compressed air (if available).
8. If you removed the brewer, make sure the motor drive link is aligned as shown.
   a. If the motor drive link is aligned properly, the flat on the cam wheel will seat on the bearing.
   b. If the motor drive link is not aligned properly, the flat on the cam wheel is turned away from the bearing. You must manually turn the cam wheel to capture the bearing on the flat.
9. Assemble in the reverse order of disassembly.

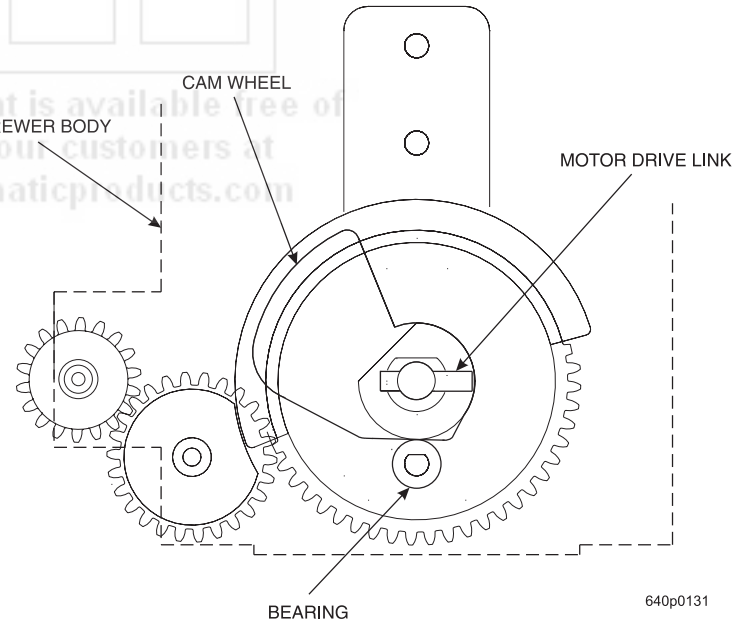


**NOTE**

When replacing the screen and seal assembly, make sure you hear *TWO CLICKS* as you push it all the way in.

10. Feed new filter paper through paper guide and brewer as shown, and don't forget to connect the hose(s)!

This document is available free of charge to our customers at www.automaticproducts.com

11. Position the Squeegee Assembly as shown in the figure at right.
12. Load the Optional Filter Paper:
    a. Turn the fastener $^1/_4$ turn counterclockwise and remove the filter paper cover.
    b. Insert filter paper in the filter paper housing as shown.
    c. Feed the paper out of the housing as shown by the arrows molded into the back wall of the filter paper housing
    d. Lift up the limit switch and feed the paper past it as shown. Release the limit switch.
    e. Replace the cover
    f. Refer to routing label on filter paper cover. Feed paper under paper guide shaft and over rounded edge of stainless steel brackets as shown.
    g. Lift and rotate the idler roller assembly up.
    h. Route the paper under the brewer cylinder and the idler rollers.
    i. Release the idler roller assembly, capturing the filter paper.
    j. Route the paper into the grounds bucket.

**Paperless Brewer Assembly**

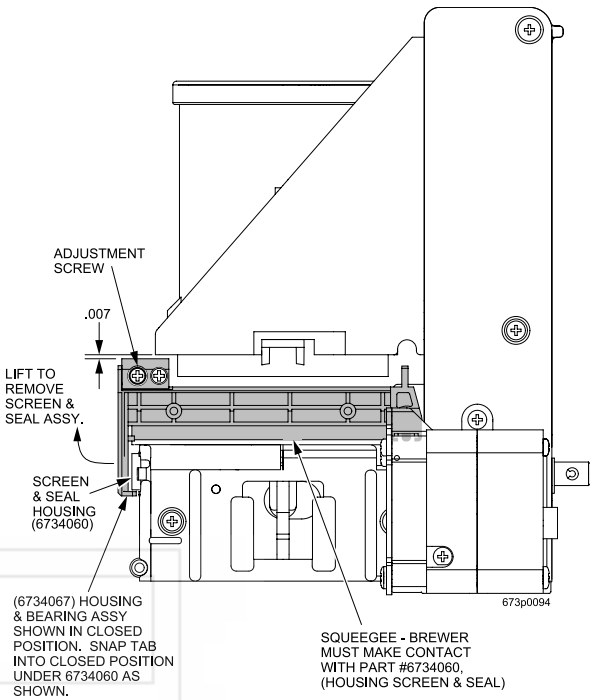


**NOTE:** THE SQUEEGE ASSEMBLY MUST BE SEATED CORRECTLY WITH THE PROPER CLEARANCE FROM THE CYLINDER CARRIER (.007") AS SHOWN FOR BEST OPERATION.

**Brewer Assembly w/Paper**

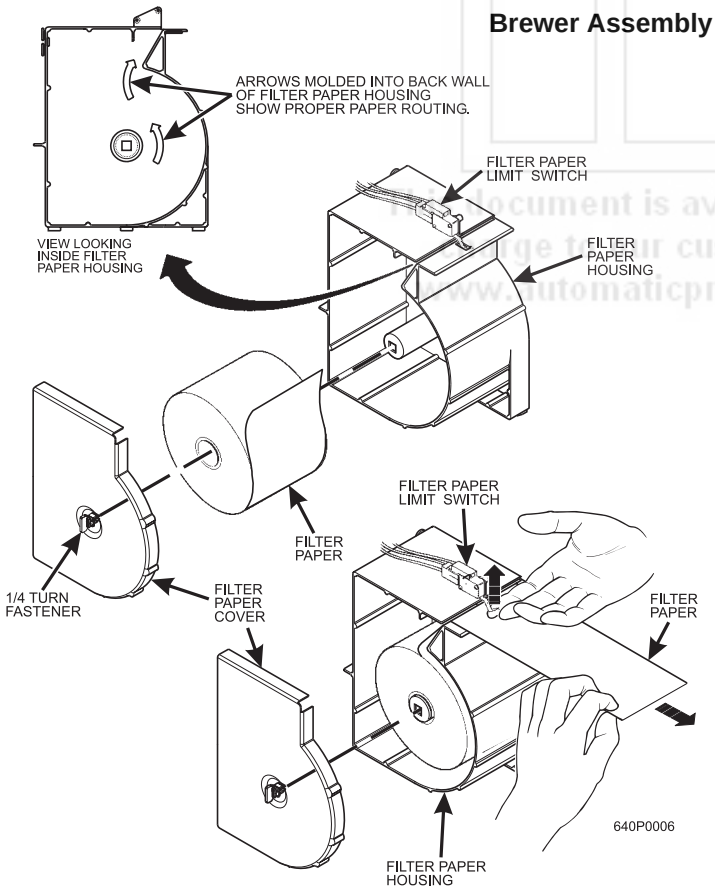


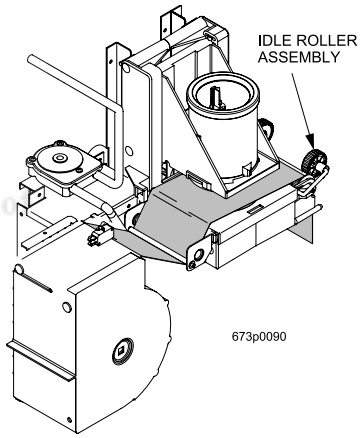


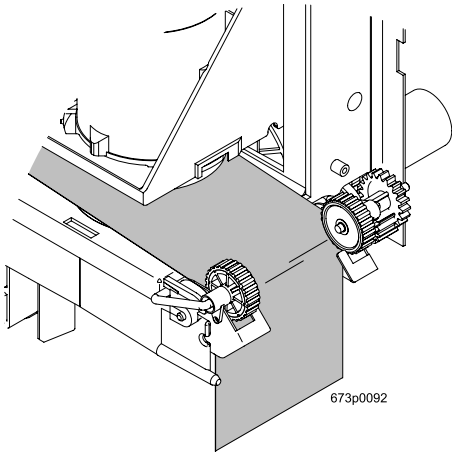


Document is available free of charge to our customers at www.automaticproducts.com

## Overall Cleaning

Inspect your merchandiser both inside and out. Be sure to check corners and all less visible parts of the merchandiser.

Clean where needed.

Allow the inside of the cabinet to dry thoroughly before you close the door.

Automatic Products recommends using the following supplies:

- A commercial glass cleaner on the glass in the cabinet door.
- A mild detergent and warm water on the cabinet, brewer, and other NON ELECTRICAL components.

### WARNING

**The plastic parts in your merchandiser should be cleaned with mild detergent and warm water. The use of other cleaning agents may damage the material, and should be avoided.**

## Preventive Maintenance Cleaning

Periodically, you should visually inspect your merchandiser's hot water tank for excessive lime and scale buildup. This buildup on the tank walls, water valves, and heater element will vary dramatically, depending upon water quality. You should develop a cleaning and de-limeing schedule based on the apparent local water quality.

**NOTE**

To aid in removing scale from your merchandiser, Automatic Products has a service kit available: part number 6400080. In addition, if your machine has the Everpure water inlet filter system option, a second kit (part number 6400086) is also available

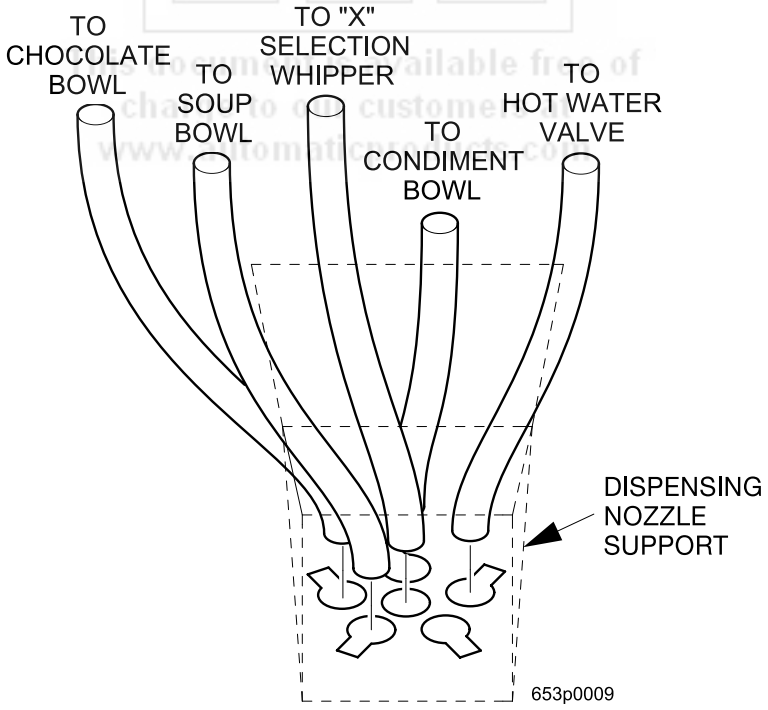


**Tube Routing Diagram**

**Recommended Cleaning And Sanitation Intervals**

| ITEM | DAILY | WEEKLY | MONTHLY |
|---|---|---|---|
| Ingredient Canisters | C | | S |
| Mixing Bowls | C | S | |
| Whipper Funnels and Impellers | C | S | |
| Beverage Discharge Nozzles | C | S | |
| Brewer, Brewer Barrel and Brewer Funnel | C | S | |
| Bean Grinder & Coffee Chutes | C | S | |
| Bean Grinder Housing | | S | |
| Brewer Mechanism | | C | |
| Cup Delivery Compartment | C | | |
| Exhaust Fan Filter | | C | |
| Grounds Pail | C | | |
| Waste Pail | C | | |

**S = Sanitize at this interval** **C = Clean only at this interval**

This document is available free of charge to our customers at www.automaticproducts.com

Make copies of this cleaning record, cut it out, and keep it in the plastic bag mounted on the inside of the door. It will be your record of cleaning your machine.

| **Record of Cleaning**<br>**20_____** | | | | | |
|---|---|---|---|---|---|
| | | | | | |
| JAN | | | | | |
| | | | | | |
| FEB | | | | | |
| | | | | | |
| MAR | | | | | |
| | | | | | |
| APR | | | | | |
| | | | | | |
| MAY | | | | | |
| | | | | | |
| JUN | | | | | |
| | | | | | |
| JUL | | | | | |
| | | | | | |
| AUG | | | | | |
| | | | | | |
| SEP | | | | | |
| | | | | | |
| OCT | | | | | |
| | | | | | |
| NOV | | | | | |
| | | | | | |
| DEC | | | | | |

This document is available free of charge to our customers at www.automaticproducts.com

# Programming

## Getting Around

Getting around the Cafforia software is pretty easy once you know the features that are available to you, and how to use them. The three main parts you will use are the **Service Keypad**, the **Selection Switch Panel**, and the **Display**.

### The Service Keypad

For most of your programming jobs, you will be using the service keypad, conveniently located on the monetary panel. The service keypad has 16 keys. The three columns on the left are the ***MODE keys.*** The right hand column contains the ***MOVEMENT keys.***

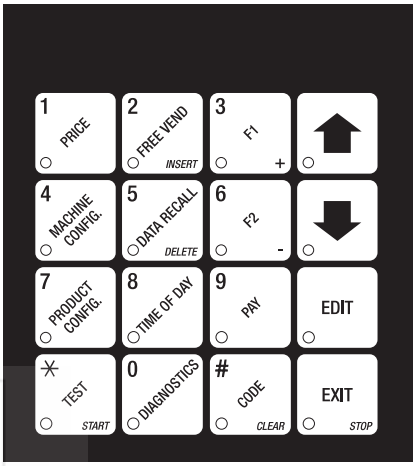


**Service Keypad**

### The Selection Switch Panel

The selection switch panel is also located on the monetary panel. Unlike the service keypad, it is accessible when the cabinet door is closed. These are the keys the customer will use to make selections. You can also use these keys during programming procedures.

This document is available free of charge to our customers at www.automaticproducts.com

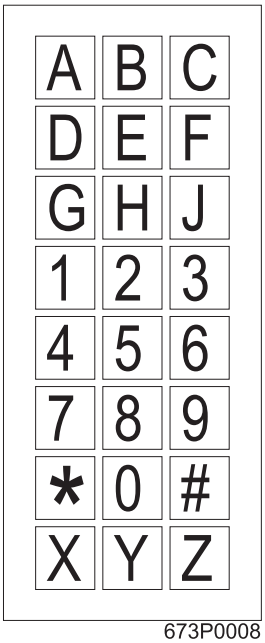


673P0008

**Selection Switch Panel**

### The Display

The 10-character display performs two functions, and is referred to in this book as "the display":

- It shows the customer's selection and how much credit is in the machine, as well as the ready, service, and time of day messages.
- It provides information and feedback to the service person during maintenance.

**DISPLAY**

## The Function Keys

The keys on the control panel can be used for up to three things:

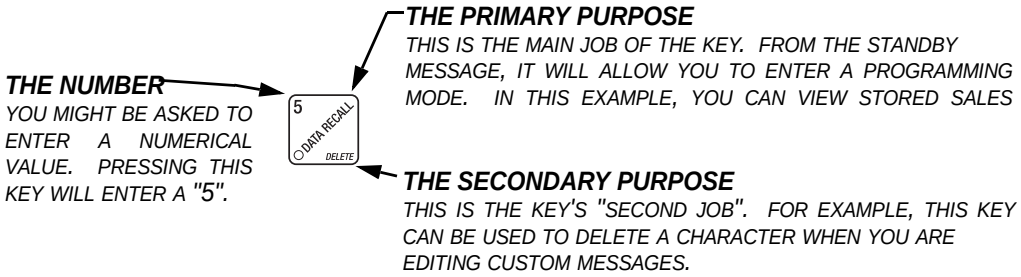


## Other Keys

The MOVEMENT keys on the control panel let you move inside a mode, and back and forth between modes.

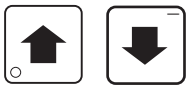

These keys are your "legs", which let you move up and down the list of tasks. They let you continue from one step to the next in programming procedures.

This is your "activate" or "choose" key. It "opens a door" to additional information and lets you begin a programming task once you are inside of a mode. Sometimes, it is used as a toggle switch to show you your choices during a programming task.

This key can be used before running a function, or to choose "ALL" in a multiple selection.

This is your "end" key. Pressing it one or more times will move you back to the start of the mode, or all the way back to the standby message.

This document is available free of charge to our customers at www.automaticproducts.com

# Programming Procedures

## Some Conventions

All programming procedures assume that you are starting with the standby message showing in the display. If not, just press

until you get there.

Definitions and helpful information will appear in shadow boxes:

**HELPFUL HINT**

When you see the word **CONTINUE** at the end of a function, it means to press

until you return to the standby message.

## Control Panel Switch Functions

Press this button to put your machine into the Price Setting mode. You can see maximum and minimum machine prices, and change prices for entire machine, entire tray, or individual selection.

Press this button to set up how the Free Vend mode will operate.

Press this button to view the water tank temperature, software version number, machine and accessory configuration, and active selection status.

Press this button to:

- Select display language
- Select coin mechanism and options
- Select bill validator and options
- Select card reader and options
- Select monetary options
- Set winner feature
- Set mug discount option

Press this button to:

- View total sales and vends by whole machine, selection, or drink size
- Clear resettable data
- View or set machine ID

Press this button to:

- Download data into your portable data collection device (PDCD), **OR**
- Set printer baud rate, depending upon which device you are using

Press this button to:

- Set machine configuration
- Set which selections are active
- Set up water tank low power
- Set up blended selections
- Set up cup sizes
- Select SureVend™ options

Press this button to:

- Set time of day
- Set day, month, year
- Set up time of day intervals for inhibit, freevend, and discount vending
- Select display messages
- Edit messages
- Set message scrolling speed

This document is available free of charge to our customers at www.automaticproducts.com

Press this button to pay one or more coins from the coin mechanism.

Press this button to see any fault or condition that may place the machine out of service

Press this button to:

- Perform TEST VENDS
- Test machine functions
- Test displays
- Fill the water tank

Press this button to:

- Enter the SUPERVISOR mode
- Change the SUPERVISOR access code
- Lock and unlock access to functions
- Set free vend code

## SureVend™

SureVend™ ensures that a cup is always available in the cup station before any money is collected or product delivered. The sensing system is a beam of infrared light across the cup station which is broken by the cup when it falls into position.

The SureVend™ software monitors the cup station sensor during the time the cup ring is cycled and for three seconds afterward. If a cup is not detected, the software will first determine if a second cup ring with the same size cups exists and will then try to drop a cup from the second ring. If the second ring also fails to drop a cup or is not usable, the software will repeat the attempt from the first cup ring to attempt to clear any jams in the cup delivery area. Each ring will be tried up to two times. If a cup is still not detected by the infrared sensor then several things happen:

- Any ring that failed twice in a row is placed temporarily out-of-service for a length of time that is determined by the user,
- The customer's credit is either restored for another vend attempt or is returned automatically.
- Three beeps are sounded and the message **SELECT ANOTHER SIZE** is flashed if another size cup ring is available, or the message **INSERT MUG** is flashed in the event that no other cups are available. The customer may always get his money back by pressing the coin return button.

**NOTE**

**INSERT MUG** is the default message. You may customize this message if desired (see "Edit Custom Message" on page 77 for more information).

Special rules exist to protect both the customer and the operator from loss. First and foremost, the customer is protected because no drink is spoiled nor money lost because a cup fails to fall to the cup station. The customer is given every chance to get his original choice of cup size by trying at least twice per ring to eject a cup. If two rings are available with the same cup size, the system will alternately try to vend a cup from each ring until the cup is delivered or both rings are placed out-of-service.

The operator is protected by the anti-jackpot program of the system. It is conceivable that a customer could prevent cups from reaching the sensing area of the cup station in order to steal the cups and then get his or her money back for the vend. Under the SureVend™ Anti-Jackpot system, the operator can lose no more than two cups in a row per ring. Then that ring is temporarily placed out-of-service both to protect the customer and to discourage theft. The amount of time that the cup ring is out-of-service is programmable from 0 to 99 minutes. After the time has elapsed, the cup ring will return to service but the count of the two failures is kept. If the previous problem was theft, then the next vend attempt from that ring will be successful and the count of the two previous failures will be erased. If the problem is an actual system failure, then the third failure will permanently place that cup ring out of service until a service technician visits the machine

Alternate cup vends and mug vends still work as before. If a cup ring is out of service due to SureVend™ the alternate vend will only be from a selected large cup to a small cup at the small cup price. An induced SureVend™ failure cannot cause an alternate vend from a selected small cup to a large cup at the small cup price. This protects the operator from customers trying to get large cup drinks at a small cup price. (SureVend™ will not automatically switch to a different cup size in mid-vend because it cannot be ensured that correct change will be returned for the new price.)

SureVend™ can be turned off if desired (see "Turn SureVend™ On or Off" on page 71).

## The Supervisor Mode

The supervisor is allowed to do things that a normal user cannot, like controlling access to certain modes. The supervisor can lock out any of the programming modes to anyone who does not have the right "key". Once a supervisor enters the proper code, he or she will be able to:

- Change the supervisor access code.
- Lock out any or all of the service keypad modes.
- Set whether data is cleared with

or after being downloaded into a portable data collection device.
- Grant or deny access to data items during **DATA RECALL.**
- Modify the machine configuration.

This document is available free of charge to our customers at www.automaticproducts.com

# Programming Procedures

## Gain Access To The Supervisor Mode

1. Press

. The display shows: **ENTER CODE**. You must enter the four-digit supervisor code within 6 seconds to gain access.

**NOTE**

A new machine has a factory-set supervisor code of **0000.**

2. When you have entered the right code, you will hear two beeps and see **UNLOCKED** in the display.

## Enter A New Supervisor Code

1. Follow the steps in "Gain Access to the Supervisor Mode" above.
2. Press

. The display shows **SUPER XXXX**. The X's represent the current supervisor code. Use the number keys to enter a new code.

**IMPORTANT**

If you enter a new code, be sure to keep a written record of it.
There is no other way to access the SUPERVISOR mode.

3. CONTINUE

## Enter A Freevend Code

1. Follow the steps in "Gain Access to the Supervisor Mode" above..
2. Press

, then until the display shows **FREE XXXX**. The X's represent the current freevend code. Use the number keys to enter a new code. If the code is anything other than "**0000**", it must be entered after the key lock is turned in order to enable free vends.
3. CONTINUE

This document is available free of charge to our customers at www.automaticproducts.com

## Enter a New Data Recall Code

If the proper non-zero code is entered, sales and non-resettable sales data can be viewed without opening the machine's door.

1. Follow the steps in "Gain Access To The Supervisor Mode" on page 43.
2. Press until the display shows **NR XXXX**. The X's represent the currently entered code. Use the number keys to enter a new code, if desired.

**NOTE**

A code of **0000** disables this feature.

**USAGE**

With the machine in ready mode, enter the 4-digit code. When the correct code is entered, the non-resettable sales total is displayed. This display will remain active for 9 seconds, or until another key is pressed.

3. CONTINUE

## Lock Or Unlock Mode or Payout Keys

1. Follow the steps in "Gain Access To The Supervisor Mode" on page 43
2. Press until the display shows either # **LOCKED** or # **UNLOCKED**. To see if a key is locked or unlocked, press that key.
3. Press to change between locked and unlocked. When anyone other than the supervisor tries to enter a locked mode, the display shows **LOCKED**.
4. EXAMPLES: Press , then press to lock the function. Now, non-supervisory users can NOT view any sales data.
5. If you want non-supervisory users to view data but not be able to clear data, leave the key unlocked, but do lock .

**NOTE**

The following mode keys cannot be locked out:

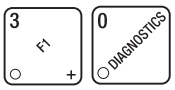

6. CONTINUE

This document is available free of charge to our customers at www.automaticproducts.com

## Set Printer or DEX Options

1. Follow the steps in "Gain Access To The Supervisor Mode" on page 43.
2. Press until the display shows:

   **PRINTER** - means that data will be sent directly to a printer,

   **- OR -**

   **DEX ONLY** means that data remains in memory after it is downloaded into a portable data collection device (PDCD),

   **- OR -**

   **DEX+CLR** means that resettable data is cleared after it is downloaded into a PDCD.

   **- OR -**

   **NR DEX** - a special DEX option. All sales data will become non-resettable. **Consult your DEX supplier before choosing this option.**
3. Press to change between the three choices.
4. CONTINUE

## Select Printer Baud Rate

### (Printer mode only)

| | |
|---|---|
| **BAUD RATE** | The speed of data transfer, expressed in bits per second. Your printer can receive data at a certain rate, and you must tell the machine what that rate is. |

This document is available free of charge to our customers at www.automaticproducts.com

1. Press . One of the following is displayed:

   **BAUD 1200** **BAUD 2400** **BAUD 4800** **BAUD 9600**
2. Press until the correct baud rate for your printer is displayed.
3. CONTINUE

## Set DEX Options
### (DEX Mode Only)

1. Follow the steps in "Gain Access To The Supervisor Mode" on page 43.
2. Press . The display shows one of two resettable bill validator totals transmitted to the DEX device:

   **CA 304 = N.C.** - the value of bills in the stacker will be transmitted in a cash format. For example: 200 for two dollars. (This is the default setting.)
   **CA 304 = N.O.** - the value of bills in the stacker will be transmitted in a dollar count format. For example: **2** for two dollars.
3. Press

to switch between the two choices. Consult your DEX handheld supplier for the proper settings for your machine.

   **NOTE**

   If your bill count is incorrect, the CA304 setting may be wrong. Try using the other setting.
4. Press until the display shows one of the following two date/time options:

   **LAST.VND.ON** - the DEX device will transmit the date and time of the last vend for each selection.

   **- OR -**

   **LAST.VND.OFF** - the DEX device will **NOT** transmit the date and time of the last vend for each selection. (This is the default setting)
5. Press

to switch between the two choices.
6. CONTINUE

## Select Display Language

1. Press

. The current **LANGUAGE** is shown in the display. Press

to choose the desired language. Your choices are:
**ENGLISH**, **DEUTSCH**, **FRANCAIS**, **ESPANOL**, **PORTUGUES**, **NEDERLANDS**, or **SWEDISH**.
2. CONTINUE

This document is available free of charge to our customers at www.automaticproducts.com

## Set Talker Mode

1. Follow the steps in "Gain Access To The Supervisor Mode" on page 43.
2. Press

, then until the display shows **TALK ON** or **TALK OFF.**
3. Press

to turn the talker option ON or OFF.

   **NOTE**

   Talker hardware must be installed for this to work.
4. CONTINUE

## Select Coin Mechanism

1. Press 4 MACHINE CONFIG., then press ↓ until the current **COIN MECHANISM** is shown in the display. Press EDIT to choose the desired coin mechanism. Your choices are:

   **DUMB MECH, MDB MECH, EXEC MECH OR NO MECH.**

2. Proceed to "Select Monetary Options" on page 49 to customize your coin mechanism choice.

**NOTE**

Depending upon your choice of coin mechanisms, some displays may not appear.

3. CONTINUE

## Select Bill Validator

1. Press 4 MACHINE CONFIG., then press ↓ until one of the following is displayed:

**NO DBV** - No bills will be accepted or there is no bill validator installed (you can exit the function).

**SER.1.2.5.10.20** - The serial bill validator is selected and will accept $1, $2, $5, $10, and $20 bills. Use **BILL SELECTION METHOD** below to change the bills that will be accepted.

**MDB.1.2.5.10.20** - A standard MDB bill validator is selected. It will accept $1, $2, $5, $10 and $20 bills. Use **BILL SELECTION METHOD** below to change the bills that will be accepted.

**BILL SELECTION METHOD:**
The standard $1, $2, $5, $10 and $20 bills are enabled by pressing the **1, 2, 5, 6,** or **7** key(s), respectively, to display which bill(s) will be accepted.

manuals available free of charge
www.automaticproducts.com

**MDB. <*>** - An MDB bill validator that accepts coupons or non-standard bills (normally used for non-U.S. currency) is connected and operating. Press * TEST START to enter list of bills.

See **BILL LIST OPERATION**. See **INITIAL SETUP OF NON-STANDARD BILL VALIDATOR**.

**INITIAL SETUP OF NON-STANDARD BILL VALIDATOR**

Connect the bill validator, select **MDB** in the bill validator selection screens. The standard **MDB.1.2.5.10.20** screen will appear first. Exit the bill validator setup by pressing EXIT STOP. Bill information is now collected from the validator. Re-enter the bill validator selection screen and the non-standard screen **MDB. <*>** will display.

**1.1.00 ON** - **BILL LIST OPERATION:**
If the binary switch settingas for the validator are set for $1, $2, $5, $10, and $20 bills, you will be able to set the acceptance options for each denomination.

Use and to scroll through the list of bills.

Use

to toggle the bill acceptance for each denomination **ON** or **OFF**.

Use

to move up to the top level screen.

**1.1.00 ON** - 1.=Bill validator channel 1, each bill has its own channel.
1.00=Bill value.
ON = $1.00 bill will be accepted.

**1.1.00 OFF** - OFF = $1.00 bill will **not** be accepted.

**TKN** - Token bills (same as coupon bills).

**Example**: To set a non-standard MDB bill validator to NOT accept $2 bills:

Press until **1. 200 ON** displays.

Press

so that the display reads **1. 200 OFF**.

Repeat the two steps above to configure the acceptance options for the other denominations.

This document is available free of charge to our customers at www.automaticproducts.com

**PULSE DBV** - The pulse bill validator will accept $1 bills.

2. Press

to choose the desired option.
3. Proceed to "Select Monetary Options" on page 49, to customize your bill validator choice.

**NOTE**

Depending upon your choice of bill validator, some displays may not appear.

4. CONTINUE

## Select Card Reader

1. Press 4 MACHINE CONFIG., then press ↓ until the current card reader is shown in the display. Press EDIT to choose the desired card reader.
2. Your choices are: **NO CARD**, **DUMB CARD**, or **MDB CARD**.
3. Proceed to "Select Monetary Options" below, to customize your card reader choice.

**NOTE**

Depending upon your choice of card reader, some displays may not appear.

4. CONTINUE

## Select Monetary Options

Certain options can be selected, depending upon which monetary devices you have selected.

This function lets you:

- Set change returning criteria.
- Set declining balance.
- Set currency acceptance on low change.
- Set overbuy options.
- Set last bill stacking options.
- Set card reader revalue options.

1. Press 4 MACHINE CONFIG., then press ↓ until the display shows **CHANGE X.XX**.

   **X.XX** represents the largest denomination coin or bill that will be changed without a purchase. Any non-zero value here will return all escrowed coins. (Each coin denomination for which the coin mech has a tube is called an ***ESCROWED*** coin because it can be returned.) When the coin return button is pressed, all coins inserted will be returned provided there is a coin mech tube for each of those coins, ***EXCEPT*** in the forced vend mode.

   Some examples:
   **CHANGE 0.00** - Forced vend; NO change returned without a purchase.
   **CHANGE .25** - Returns change without purchase if all accepted coins are less than .25 denomination or have a payout tube. Acceptance of a dollar coin will not cause a Force Vend if the coin mechanism has a dollar coin payout tube. Otherwise, accepting a dollar coin or accepting and stacking of a dollar bill will cause a Force Vend.
   **CHANGE 1.00** - Bills and non-escrowed coins less than or equal to $1.00 will be changed without purchase. All escrowed coins are returned.

2. Press ↓ until one of the following is displayed:
3. **ACC <$$ X.XX** -Accept any bill of value $X.XX or less, regardless of available change. Hold the last bill which meets or exceeds maximum price in escrow. (This setting is normally used.)

**- OR -**

4. **ACC.STK X.XX** -Accept any bill of value $X.XX or less, regardless of available change. Immediately stack the last bill.
5. **Example: i**f setting is **ACC.STK 1.00** and maximum price is $1.50. This setting will immediately stack the second $1.00 bill inserted.
6. Press EDIT to display the desired choice.

7. The value of "**X.XX**" has two purposes:
   a. The value of "**X.XX**" tells the machine how big a bill or coin to accept even though there is not enough change in the coin mech to cover all possible paybacks.

      For example, enter **1.00**. Therefore, the machine will take a dollar bill or coin even though there is less than $1.00's worth of change. Entering **5.00** tells the machine to take a five even though there is less than $5.00's worth of change, and so forth.

      **NOTE**

      This could cause a customer to be short-changed.

      Entering **0.00** means that bills or coins not held in escrow or in a tube will only be accepted if there is enough change to cover them.

   b. The value of "**X.XX**" tells the machine how much the customer is allowed to overbuy a product. The customer will be short-changed when an overbuy occurs.
      **Example:** for a value of $0.25: if there is no change in the machine and the customer inserts a $1.00 bill. The customer can purchase a product for $0.75 even though the change cannot be paid back. The customer will be short-changed. Normally a purchase will not be approved unless all change can be paid.

      Entering **0.00** means that the vend will only be approved when the correct change can be returned (overbuy disabled).

8. Press until the display shows: **LOW.MSG X.XX**. The display will show **USE EXACT CHANGE** when the amount of available change in the coin mechanism falls below the value of "**X.XX**". Enter a value with the number keys. For example, if **LOW.MSG 1.00** is displayed, the **USE EXACT CHANGE** message is displayed when less than a dollar's worth of change is in the coin mechanism.

| | |
|---|---|
| **DECLINING BALANCE:** | Once credit is established, multiple vends may occur until the coin return is pressed. |

9. Press until one of the following is displayed:

   **DECLINE.ON** - More than one vend is allowed, with a declining balance.

   **- OR -**

   **DECLINE.OFF** - A declining balance is not allowed.

10. Press to display the desired choice.

11. Press until one of the following is displayed:

    **REVALUE.ON** - Allows credit to be transferred onto the card.
    **REVALUE.OFF** - Credit cannot be transferred to the card.

12. Press to display the desired choice.

13. CONTINUE

This document is available free of charge to our customers at www.autocaffeine.com

## Set Up Winner Mode

| | |
|---|---|
| **WINNER** | At preselected intervals, a customer may receive a refund for a selection. You can select the interval and qualifying selections. |

1. Press

, then press until one of the following is displayed:

   **WINNER OFF** - Winner function is disabled.

   **- OR -**

   **WIN XXX** - Winners are allowed at certain intervals, represented by "**XXX**".

   Press

to display the desired choice.

   If you selected **WINNER OFF**, you can exit the function.

2. The display shows **WIN XXX**. "**XXX"** represents the number of vends that must occur per each winner vend. For example, an interval number of **50** means that a winner can happen any one time during the next 50 vends. Using the number keys, enter an interval number between **10** and **9999**.

3. Press . The display shows *** - - - - - - - - - -** . The dashes in the display represent which selections are allowed winners. Press the appropriate letter key to enable a selection, press the key again to disable it. For example, pressing **A**, **C**, and **E** will cause the display to look like this:

   **A** - **C** - **E** - - - - - meaning that all **A**, **C**, and **E** products can have a winner..

### Advanced Options:

This document is available free of charge to our customers at www.automaticproducts.com

- Press

to enable all selections.
- Press

to deactivate all selections.
- Press **0** or **1** to set winner selections by cup size.

**NOTE**

If displaying **WINNER** by selection, press

once to redisplay wildcard ( *****, **ABC**....) selections.

### An Example . . .

You want to enable winners on all selections except **E** and **F.** Do the following:

a. Press

. The letters **A** through **J** appear in the display instead of the dashes.

b. Press "**E**" and "**F**". The letters **E** and **F** in the display are replaced by dashes.

**NOTE**

This is a two-part screen. Press

to display selections **X**_ _ **2** _ _ _ _.

4. CONTINUE

## Set Up Mug Discount

You can establish a discount for customers who use their own mug.

1. Press

, then press
until the display shows **MUG DSC .00**. This example shows the existing discount amount is zero.
2. Enter a discount amount. This will be in cents, for example press

or **5** to enter a discount amount of 5 cents.
3. CONTINUE

This document is available free of charge to our customers at www.automaticproducts.com

## Set the Machine Type and Configuration Code

### (Supervisor Mode Only)

1. Press 7 PRODUCT CONFIG., then ↓ until the display shows **MACH.TYPE 0** or **1.**

2. Press 1 PRICE or 1 to enter **MACH.TYPE 1**.

3. Press ↓ until the display shows **D+J+ WXYZ** . "**D**" is the automatic delivery door status. A plus sign (**+**) means the door is on; a dash (**-**) means the door is off. Toggle this setting by pressing EDIT.

   "**J**" is the whipper setting. Toggle a plus sign (**+**) or a dash (**-**) with the **J** key. See "Whipper Options" on page 58 for more information. "**WXYZ**" is the machine configuration code. **W** represents the machine type, **X** is the 6th product configuration, **Y** is the brewer configuration, and **Z** is canister mapping. The following tables give the possible values for each of the four numbers. Enter the appropriate configuration code for your machine.

**Table D1 Machine Type Configuration**

| Enter for (W) | Definition |
|---|---|
| 1 | Cafforia model 943 |
| 5 | Cafforia models 942 and 944 |

**Table D2 6th Product (Selection C) Configuration**

| Enter for (X) | Definition |
|---|---|
| 1 | No 6th product |
| 2 | 6th product present, but receives no condiments |
| 3 | 6th product present, may receive condiments |
| 4 | Water only |

This document is provided free of charge to our customers at www.automaticproducts.com

| | |
|---|---|
| **SINGLE BREW** | A machine with only one brewed selection (the second selection is freeze dried.) Uses a single barrel brewer. |
| **DUAL BREW** | A machine with two brewed selections. |
| **DUAL CONDIMENT** | A machine with two separate sets of condiments (lightener/sugar) to avoid cross-flavoring. |

**Table D3 Brewer Configuration**

| Enter for (Y) | Coffee Mix | Number of Brewers | Condiment Sets |
|---|---|---|---|
| 1 | Single Brew | One | Single |
| 2 | Dual Brew | One | Single |
| 6 | Freeze Dry | None | Single |

**Table D4 Canister Mapping (see following figure)**

| Enter for (Z) | Menu Selection Letters for Canister Numbers | | |
|---|---|---|---|
| | 3 (Single condiment only) | 2 | 1 |
| 1 | F | B | A |
| 2 | F | A | B |
| 3 | B | F | A |
| 4 | B | A | F |

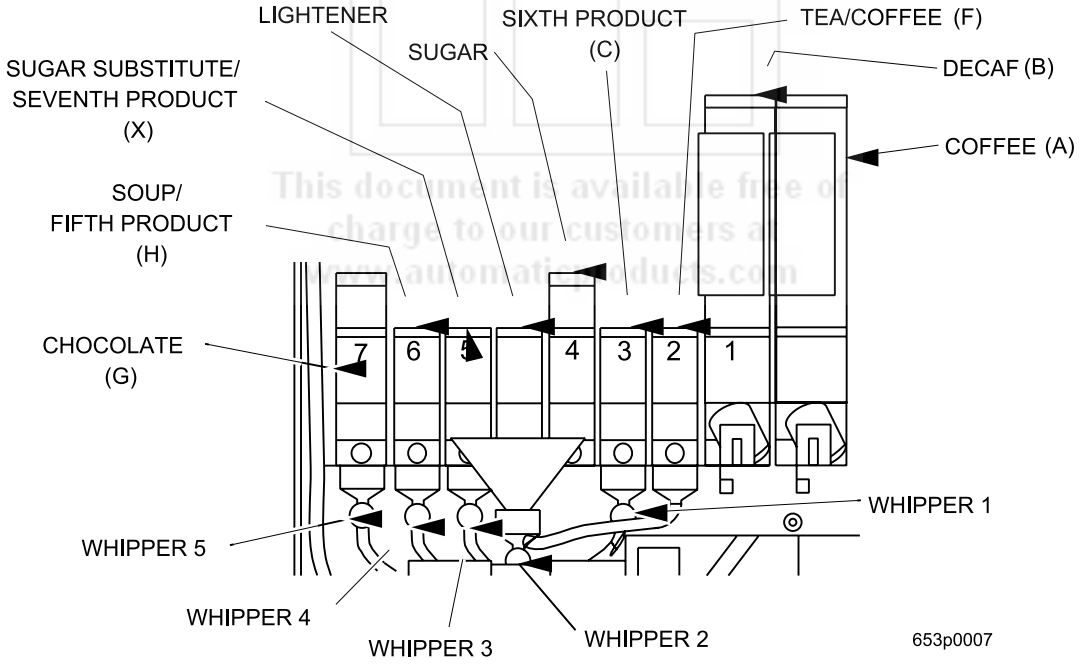


**Canister Mapping**

## Disable Selections in the Merchandiser

1. Press 7 PRODUCT CONFIG., then press ↓ until the display shows something like this:

   **LK. ABCDEFGH**. This display means that all regular size selections (**A** - **H**) are not available for vending. An available selection has its letter replaced by a blank space. Press EDIT to display the second screen for **X, Y**, and **Z** selections.
2. Press the appropriate letter to toggle the display on or off.

**NOTE**

Press * TEST START to lock all selections; press # CODE CLEAR to unlock all selections.

3. CONTINUE

## Set Up Cup Sizes

Make sure the cup sizes you select agree with the cups you have actually loaded during setup.

1. Press 7 PRODUCT CONFIG. until the display shows **X OZ Y**. "X" is the currently selected drink size for the cups in turret 2 (normally large cups), "**Y**" is the currently selected drink size for the cups in turrets 1A and 1B (normally regular cups).
2. Press 1 PRICE to change the #1 cup ring size; press 2 FREE VEND INSERT to change the #2 cup ring size.
3. Any changes made to the cup sizes must be "locked in". There are two ways to do this:
   a. If you are keeping some cup sizes the same, or putting the cups in different cup rings, press and hold * TEST START. The display momentarily shows **CLEARING**, two beeps sound, then shows **FINISHED**. This will reassign the old throw times to the new cup ring, if possible.
   b. If you are loading all different size cups, or want to load all new default times, press and hold # CODE CLEAR. The display momentarily shows **CLEARING**, two beeps sound, then shows **FINISHED**. This will reload the factory default times for all cup sizes, clearing any custom throw times you have established. (See the tables on the following pages for the factory default times.)
4. CONTINUE

charge to our customers at

## Assign Cup Sizes to Selections
### (Supervisor Mode Only)

You can load up to two different sizes of cups in your machine (see "Set Up Cup Sizes" on page 55). You may not always want a certain selection to use all of the cup sizes in your machine. For example, espresso is normally served in regular cups, so you probably will not want it to be available in large or jumbo cups.

1. Press 7 PRODUCT CONFIG., then press ↓ until the display shows something like this:

   **0. ABCDEFGH**. This display means that the smaller of the two cup sizes (**0**) is available for all selections (**A** - **H**).

**NOTE**

Press * TEST START to display all selections; press # CODE CLEAR to clear all selections.

2. Press EDIT to display remaining selections (**0 X_2**_ _ _ _ ). In this display, the "**X**" represents the 7th product, and the "**2**" represents the cup only selection.

**NOTE**

If you have only one cup size in your machine, you will not see the next display.

3. Press ↓. The display shows something like this:

   **1. ABCDEFGH**. This display means that the larger of the two cup sizes (**1**) is available for all selections (**A** - **H**).

4. Press the appropriate letter to toggle the display on or off. A selection that doesn't vend the displayed size cup has its letter replaced by a dash (**-**).

charge to our customers at
www.automationproducts.com

**NOTE**

Press * TEST START to display all selections; press # CODE CLEAR to clear all selections.

5. Press EDIT to display remaining selections (**1 X_2**_ _ _ _ ). In this display, the "**X**" represents the 7th product, and the "**2**" represents the cup only selection.

   *To vend a cup only, press **1, 2, 3** (large size) or **2, 3** (regular size).*

6. CONTINUE

## Set Up A Hot Drink

Be sure that the cup sizes you set in "Set Up Cup Sizes" on page 55 agree with the cup sizes actually in your machine. All procedures for setting up the hot drinks are similar, so this example will demonstrate how to set up the **A** selection, regular size fresh brew coffee.

1. Press

, then press until the display shows **SETUP - ***. The star (*) represents the selection (**A**, **B**, etc.). The dash (**-**) represents the size of the selection.
2. Press **A**. (If you were setting up the **A** selection for the large size drink, you would press **1** first, then **A**.) The display shows **WAT. A 8.25**. This means that the currently set water throw time for the A selection is 8.25 seconds. Enter a new time if desired.
3. Press . The display shows **DRY. A .60**. This means that the currently set dry product throw time for the A selection is .60 seconds. Enter a new time if desired.
4. Pressing after each display will cause the following screens to appear:

**Screens and Actions**

| Screen | Action |
|---|---|
| **DRY. A+** | View and change the settings for an extra strong drink. |
| **SUG. A** | View and change the settings for the sugar throw time. |
| **SUG. A+** | View and change the settings for extra sugar throw time. |
| **LIT. A** | View and change the settings for the lightener throw time. |
| **LIT. A+** | View and change the settings for extra lightener throw time. |
| **SUB. A** | View and change the settings for the sugar sub throw time. |
| **SUB. A+** | View and change the settings for extra sugar sub throw time. |
| **STP. A** | View and change the steep time. |
| **STP. A+** | View and change the steep time for an extra strong drink. |
| **AIR. A** | View and change the air compressor/pump running time. |
| **DLY. A** | View and change the amount of time after the vend to open the auto vend door. |

This document is available free of charge from the owners at www.vendingservicemanuals.com

## Whipper Options

**WHP. A XXX** Press EDIT to view and change the whipper settings:

**ON-** The last 3 seconds of the drink is always whipped.
**ON+** The whole drink is always whipped.
**OFF** The drink is never whipped.
**OPT** See below -

- If **J+** is selected
  (see "Set the Machine Type and Configuration Code" on page 53):
  **OPT-** The last 3 seconds of the drink is whipped only when the **J** key is pressed.
  **OPT+** The whole drink is whipped only when the J key is pressed.
- If **J-** is selected
  (see "Set the Machine Type and Configuration Code" on page 53):
  **OPT-** The last 3 seconds of the drink is whipped unless the **J** key is pressed.
  **OPT+** The whole drink is whipped unless the **J** key is pressed.

## Differences

Some selections will not show all of these items. The **E** selection will have some additional selections:

**WA.2 E** View and set the water throw time for the cappuccino second product (chocolate.)
**DR.2 E** View and set the chocolate throw time for cappuccino.
**PCT. E** To automatically compute new times for cappuccino, enter a percentage, then press TEST START. This percentage represents the amount of chocolate product in cappuccino, versus that in a normal chocolate drink. This time and the normal coffee settings will compute the new cappuccino time.

## Options

a. At any of the preceding displays, you can press TEST START to test throw that item.

b. At any of the preceding displays, you can press * or # (on the selection switch panel) to step through a list of that item's throw times for other selections where that item is active. For example, pressing # at the **WAT. A** display will show the throw time for **WAT. B**. This is a handy way to move from one selection to another without going to the **SETUP** screen first.

**NOTE**

If you try to set up a selection that is not configured, the **SETUP** screen will remain in the display.

5. CONTINUE

This document is available free of charge to our customers at www.automatic-products.com

## Collecting Dry Product Gram Throws

Measuring the gram throw allows you to get the right amount of dry product or condiment into your hot drink. To do this, you need a container to catch the product throw and an accurate gram scale to measure its weight.

1. Make a measuring container by cutting down a paper cup until it fits under the canister spout as shown.
2. Weigh the measuring cup and zero the gram scale accordingly.
3. Make 5 test throws as instructed in the programming steps.
4. Weigh each test throw, then add all 5 weights together and divide by 5 to get an average weight.
5. If necessary, adjust the throw time and repeat steps 3 and 4 until you get the correct product or condiment weight.

Table P1 "Dry Product Weight and Throw Time Factory Default Settings" on page 60 shows the factory default settings for the various dry products sold by the merchandiser. They are good starting points to use in setting up your machine. In the end, the amount of dry product or condiments you use in your drinks depends upon taste and manufacturers' recommendations. Recommended weights and times are for guidance only, and you do not have to adhere to them.

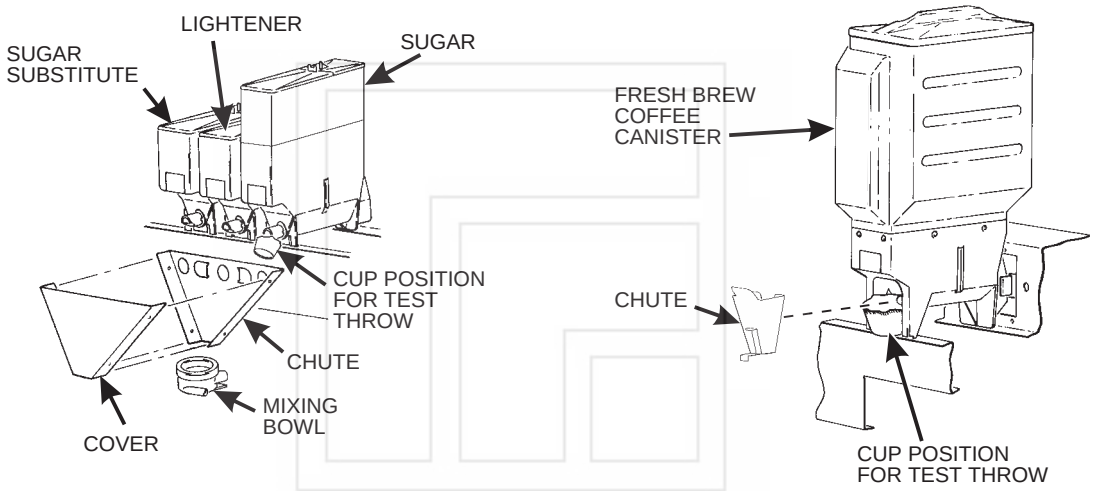


**Collecting Condiment Throws**

This document is available free of charge to our customers at www.automaticproducts.com

## Table P1: Dry Product Weight and Throw Time Factory Default Settings

| Selection | | Weight (in grams) per size cup (in ounces)<br>Throw times (in seconds) per size cup | | | | | | | | | |
|---|---|---|---|---|---|---|---|---|---|---|---|
| | | 5 | 7 | 8 | 9 | 10 | 12 | 14 | 16 | 18 | 20 |
| A | Fresh brew coffee | 5.70<br>0.80 | 8.00<br>1.10 | 9.00<br>1.25 | 10.00<br>1.40 | 11.00<br>1.55 | 13.00<br>1.80 | 15.30<br>2.10 | 17.50<br>2.45 | 19.60<br>2.75 | 21.80<br>3.05 |
| A | Freeze dry coffee | 0.90<br>0.35 | 1.20<br>0.50 | 1.50<br>0.60 | 1.60<br>0.65 | 1.80<br>0.70 | 2.20<br>0.90 | 2.55<br>1.00 | 2.90<br>1.15 | 3.25<br>1.30 | 3.65<br>1.45 |
| A | Strong freeze dry coffee | 1.10<br>0.65 | 1.50<br>0.90 | 1.80<br>1.10 | 2.00<br>1.20 | 2.20<br>1.35 | 2.60<br>1.60 | 3.05<br>6.85 | 3.50<br>2.15 | 3.95<br>2.40 | 4.35<br>2.70 |
| B | Fresh brew decaf | 5.70<br>0.80 | 8.00<br>1.10 | 9.00<br>1.25 | 10.00<br>1.40 | 11.00<br>1.55 | 13.00<br>1.80 | 15.30<br>2.10 | 17.50<br>2.45 | 19.60<br>2.75 | 21.80<br>3.05 |
| B | Freeze dry decaf | 0.90<br>0.35 | 1.20<br>0.50 | 1.50<br>0.60 | 1.60<br>0.65 | 1.80<br>0.70 | 2.20<br>0.90 | 2.55<br>1.00 | 2.90<br>1.15 | 3.25<br>1.30 | 3.65<br>1.45 |
| B | Strong freeze dry decaf | 1.10<br>0.65 | 1.50<br>0.90 | 1.80<br>1.10 | 2.00<br>1.20 | 2.20<br>1.35 | 2.60<br>1.60 | 3.05<br>6.85 | 3.50<br>2.15 | 3.95<br>2.40 | 4.35<br>2.70 |
| C | Soluble product | 10.80<br>2.45 | 15.00<br>3.35 | 17.80<br>4.00 | 19.40<br>4.35 | 21.60<br>4.85 | 25.90<br>5.80 | 30.20<br>6.80 | 34.50<br>7.75 | 38.85<br>8.75 | 43.15<br>9.70 |
| D | Fresh brew coffee ESPRESSO | 5.70<br>0.80 | 8.00<br>1.10 | 9.00<br>1.25 | 10.00<br>1.40 | 11.00<br>1.55 | 13.00<br>1.80 | 15.30<br>2.10 | 17.50<br>2.45 | 19.60<br>2.75 | 21.80<br>3.05 |
| D | Freeze dry coffee ESPRESSO | 0.90<br>0.35 | 1.20<br>0.50 | 1.50<br>0.60 | 1.60<br>0.65 | 1.80<br>0.70 | 2.20<br>0.90 | 2.55<br>1.00 | 2.90<br>1.15 | 3.25<br>1.30 | 3.65<br>1.45 |
| D | Strong freeze dry coffee ESPRESSO | 1.05<br>0.65 | 1.50<br>0.90 | 1.80<br>1.10 | 2.00<br>1.20 | 2.20<br>1.35 | 2.60<br>1.60 | 3.05<br>6.85 | 3.50<br>2.15 | 3.95<br>2.40 | 4.35<br>2.70 |
| E | Fresh brew coffee CAPPUCCINO/Café Mocha | 5.70<br>0.80 | 8.00<br>1.10 | 9.00<br>1.25 | 10.00<br>1.40 | 11.00<br>1.55 | 13.00<br>1.80 | 15.30<br>2.10 | 17.50<br>2.45 | 19.60<br>2.75 | 21.80<br>3.05 |
| E | Freeze dry coffee CAPPUCCINO | 0.90<br>0.35 | 1.20<br>0.50 | 1.50<br>0.60 | 1.60<br>0.65 | 1.80<br>0.70 | 2.20<br>0.90 | 2.55<br>1.00 | 2.90<br>1.15 | 3.25<br>1.30 | 3.65<br>1.45 |
| E | Strong freeze dry coffee CAPPUCCINO | 1.05<br>0.65 | 1.50<br>0.90 | 1.80<br>1.10 | 2.00<br>1.20 | 2.20<br>1.35 | 2.60<br>1.60 | 3.05<br>6.85 | 3.50<br>2.15 | 3.95<br>2.40 | 4.35<br>2.70 |
| F | Instant tea | 0.90<br>0.70 | 1.20<br>1.00 | 1.50<br>1.25 | 1.60<br>1.30 | 1.80<br>1.60 | 2.20<br>1.85 | 2.55<br>2.10 | 2.90<br>2.40 | 3.30<br>2.20 | 3.65<br>2.05 |
| F | Strong instant tea | 1.10<br>0.90 | 1.50<br>1.25 | 1.80<br>1.60 | 2.00<br>1.75 | 2.20<br>1.85 | 2.60<br>2.10 | 3.05<br>6.85 | 3.50<br>2.15 | 3.95<br>2.40 | 4.35<br>2.70 |
| G | Chocolate | 17.00<br>2.80 | 24.00<br>4.00 | 28.00<br>4.65 | 31.00<br>5.15 | 34.00<br>5.65 | 41.00<br>6.80 | 47.50<br>7.90 | 54.50<br>9.00 | 61.00<br>11.80 | 68.00<br>12.25 |
| H | Soup | 4.30<br>0.70 | 6.00<br>1.00 | 7.00<br>1.15 | 7.60<br>1.25 | 8.50<br>1.35 | 10.20<br>1.65 | 11.90<br>1.95 | 13.60<br>2.25 | 15.30<br>2.50 | 17.00<br>2.80 |
| H | Soluble product | 10.80<br>2.45 | 15.00<br>3.35 | 17.80<br>4.00 | 19.40<br>4.35 | 21.60<br>4.85 | 25.90<br>5.80 | 30.20<br>6.80 | 34.50<br>7.75 | 38.85<br>8.75 | 43.15<br>9.70 |
| X | Soluble product | 10.80<br>2.45 | 15.00<br>3.35 | 17.80<br>4.00 | 19.40<br>4.35 | 21.60<br>4.85 | 25.90<br>5.80 | 30.20<br>6.80 | 34.50<br>7.75 | 38.85<br>8.75 | 43.15<br>9.70 |
| D | Sugar used in espresso | 2.20<br>0.35 | 2.85<br>0.45 | 3.50<br>0.55 | 3.80<br>0.60 | 4.15<br>0.65 | 5.10<br>0.80 | 6.05<br>0.95 | 6.70<br>1.05 | 7.65<br>1.20 | 8.50<br>1.35 |
| D | Extra sugar used in espresso | 3.20<br>0.50 | 4.15<br>0.65 | 4.80<br>0.75 | 5.10<br>0.80 | 5.76<br>0.90 | 6.70<br>1.05 | 8.00<br>1.25 | 9.30<br>1.45 | 10.55<br>1.65 | 11.50<br>1.80 |
| E | Sugar used in cappuccino | 3.60<br>0.45 | 5.20<br>0.65 | 6.00<br>0.75 | 6.55<br>0.80 | 7.30<br>0.90 | 8.70<br>1.10 | 10.20<br>1.25 | 11.60<br>1.45 | 13.10<br>1.65 | 14.55<br>1.80 |
| E | Extra sugar used in cappuccino | 4.60<br>0.60 | 6.95<br>0.90 | 7.75<br>1.00 | 8.50<br>1.10 | 9.25<br>1.20 | 11.15<br>1.45 | 13.10<br>1.70 | 15.00<br>1.95 | 16.95<br>2.20 | 18.50<br>2.40 |
| F | Sugar used in tea | 4.20<br>0.55 | 6.00<br>0.75 | 7.00<br>0.90 | 7.75<br>1.00 | 8.55<br>1.10 | 10.10<br>1.30 | 12.05<br>1.55 | 13.60<br>1.75 | 15.15<br>1.95 | 17.10<br>2.20 |
| F | Extra sugar used in tea | 5.45<br>0.70 | 7.75<br>1.00 | 8.95<br>1.15 | 9.70<br>1.25 | 10.90<br>1.40 | 12.85<br>1.65 | 13.60<br>1.75 | 17.50<br>2.25 | 19.45<br>2.50 | 21.75<br>2.80 |
| F | Lightener used in tea | 1.20<br>0.70 | 1.50<br>0.85 | 2.00<br>1.15 | 2.20<br>1.25 | 2.45<br>1.40 | 2.95<br>1.70 | 3.40<br>1.95 | 3.90<br>2.25 | 4.35<br>2.50 | 4.85<br>2.80 |
| F | Extra lightener used in tea | 1.55<br>0.90 | 2.15<br>1.25 | 2.50<br>1.45 | 2.75<br>1.60 | 3.00<br>1.75 | 3.60<br>2.10 | 4.20<br>2.45 | 4.80<br>2.80 | 5.45<br>3.15 | 6.05<br>3.50 |
| F | Sugar substitute used in tea | 0.60<br>0.75 | 0.85<br>1.05 | 1.00<br>1.25 | 1.10<br>1.35 | 1.30<br>1.60 | 1.50<br>1.90 | 1.70<br>2.10 | 1.90<br>2.40 | 2.20<br>2.75 | 2.40<br>3.00 |

Spare parts are available from us at
change your customers
www.sparepartsproducts.com

| Selection | | Weight (in grams) per size cup (in ounces)<br>Throw times (in seconds) per size cup | | | | | | | | | |
|---|---|---|---|---|---|---|---|---|---|---|---|
| | | **5** | **7** | **8** | **9** | **10** | **12** | **14** | **16** | **18** | **20** |
| **F** | Extra sugar substitute used in tea | 0.80<br>1.00 | 1.10<br>1.35 | 1.30<br>1.60 | 1.40<br>1.75 | 1.60<br>2.00 | 1.90<br>2.40 | 2.15<br>2.70 | 2.50<br>3.10 | 2.80<br>3.50 | 3.10<br>3.90 |
| ** | Sugar | 4.25<br>0.55 | 5.05<br>0.75 | 7.00<br>0.90 | 7.75<br>1.00 | 8.95<br>1.15 | 10.90<br>1.40 | 12.05<br>1.55 | 13.60<br>1.75 | 15.15<br>1.95 | 17.10<br>2.20 |
| ** | Extra sugar | 5.45<br>0.70 | 7.75<br>1.00 | 8.95<br>1.15 | 9.70<br>1.25 | 10.90<br>1.40 | 12.85<br>1.65 | 13.60<br>1.75 | 17.50<br>2.25 | 19.45<br>2.50 | 21.75<br>2.80 |
| ** | Lightener | 1.20<br>0.70 | 1.50<br>0.85 | 2.00<br>1.15 | 2.20<br>1.25 | 2.45<br>1.40 | 2.95<br>1.70 | 3.40<br>1.95 | 3.90<br>2.25 | 4.35<br>2.50 | 4.85<br>2.80 |
| ** | Extra lightener | 1.55<br>0.90 | 2.15<br>1.25 | 2.50<br>1.45 | 2.75<br>1.60 | 3.00<br>1.75 | 3.60<br>2.10 | 4.20<br>2.45 | 4.80<br>2.80 | 5.45<br>3.15 | 6.05<br>3.50 |
| ** | Sugar substitute | 0.60<br>0.75 | 0.85<br>1.05 | 1.00<br>1.25 | 1.10<br>1.35 | 1.30<br>1.60 | 1.50<br>1.90 | 1.70<br>2.10 | 1.90<br>2.40 | 2.20<br>2.75 | 2.40<br>3.00 |
| ** | Extra sugar substitute | 0.80<br>1.00 | 1.10<br>1.35 | 1.30<br>1.60 | 1.40<br>1.75 | 1.60<br>2.00 | 1.90<br>2.40 | 2.15<br>2.70 | 2.50<br>3.10 | 2.80<br>3.50 | 3.10<br>3.90 |

**D** = Espresso I =

**E** = Cappuccino

* The actual gram weight of a product or condiment throw will vary depending upon the type of product or condiment used. The weights given are approximate based on factory testing.

** Separate sugar, lightener, and sugar substitute timers are available for selections **A/B/C/D**, **E**, and **F**.

This document is available free of charge to our customers at www.automaticproducts.com

## Collecting Hot Water Throws

Automatic Products recommends the factory default times be used for hot water throws to ensure proper mixing. Table W1: "Water Throw Default Times and Volumes" on page 63 gives the factory default water throw times for the various size cups and product selections.

**WARNING**
**This water is *HOT* ! Be careful.**

For a non-brewed selection, collect the water throws as follows:

1. Place a cup in the cup delivery station.
2. Ensure the merchandiser is using the factory defaults for the cup sizes (see "Set Up Cup Sizes" on page 55).
3. Initiate the water throw for a selection.
4. Remove the cup and pour the water into a graduated cylinder.
5. Refer to table W1 for the correct volume of water.
6. Adjust the throw time for that selection (see "Set Up A Hot Drink" on page 57) and repeat steps 3 through 5 until the correct volume of water is thrown.
7. If you are unable to get the desired amount of water, reset the throw time to the factory default, then adjust the water valves. You may then readjust the throw times to fine-tune your water throws.

For a brewed selection, collect the water throws as follows:

1. Remove water supply hose from the brewer.
2. Place the end of the hose in a graduated cylinder.
3. Initiate the water throw for a selection.
4. Remove the cup and pour the water into a graduated cylinder.
5. Refer to table W1 for the correct volume of water.
6. Adjust the throw time for that selection (see "Set Up A Hot Drink" on page 57) and repeat steps 3 through 5 until the correct volume of water is thrown.
7. If you are unable to get the desired amount of water, reset the throw time to the factory default, then adjust the water valves. You may then readjust the throw times to fine-tune your water throws.
8. Replace the water supply hose on the brewer.

This document is available free of charge to our customers at www.automaticproducts.com

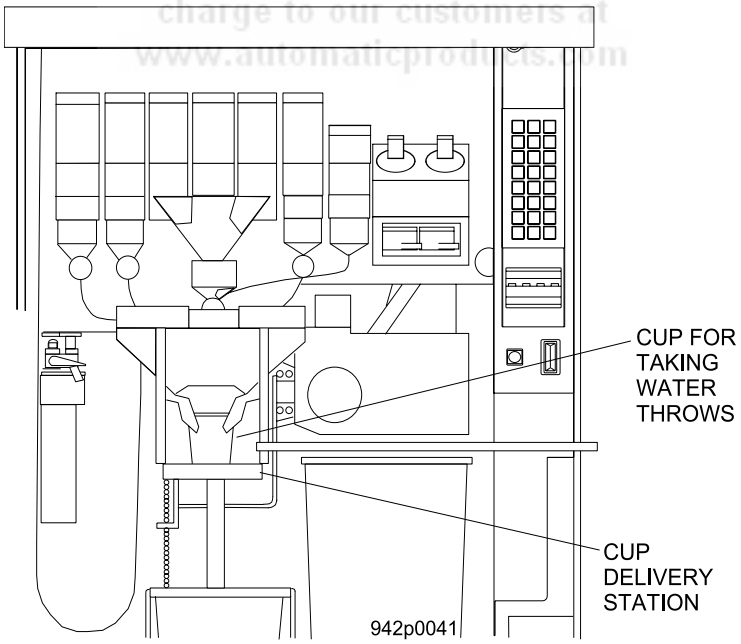

## Table W1: Water Throw Default Times and Volumes

| Selection | | Time (in seconds) per size cup / Volume (in ml) per size cup | | | | | | | | | |
|---|---|---|---|---|---|---|---|---|---|---|---|
| | | 5 oz | 7 oz | 8 oz | 9 oz | 10 oz | 12 oz | 14 oz | 16 oz | 18 oz | 20 oz |
| A | Fresh brew coffee | 5.00<br>135 | 7.00<br>190 | 8.25<br>220 | 9.00<br>240 | 10.00<br>265 | 12.00<br>320 | 14.00<br>375 | 16.00<br>425 | 18.00<br>480 | 20.00<br>535 |
| B | Fresh brew decaf | 5.00<br>135 | 7.00<br>190 | 8.25<br>220 | 9.00<br>240 | 10.00<br>265 | 12.00<br>320 | 14.00<br>375 | 16.00<br>425 | 18.00<br>480 | 20.00<br>535 |
| A | Freeze dry coffee | 5.00<br>125 | 7.00<br>175 | 8.25<br>210 | 9.00<br>225 | 10.00<br>255 | 12.00<br>305 | 14.00<br>355 | 16.00<br>405 | 18.00<br>455 | 20.00<br>505 |
| B | Freeze dry decaf | 5.00<br>125 | 7.00<br>175 | 8.25<br>210 | 9.00<br>225 | 10.00<br>255 | 12.00<br>305 | 14.00<br>355 | 16.00<br>405 | 18.00<br>455 | 20.00<br>505 |
| C | 6th Product | 5.00<br>110 | 7.00<br>155 | 8.25<br>185 | 9.00<br>200 | 10.00<br>225 | 12.00<br>270 | 14.00<br>315 | 16.00<br>360 | 18.00<br>405 | 20.00<br>450 |
| D | Espresso (FB) | 2.25<br>62.5 | 3.50<br>87.5 | 4.15<br>110 | 4.50<br>120 | 5.00<br>133 | 6.00<br>160 | 7.00<br>185 | 8.00<br>210 | 9.00<br>225 | 10.00<br>265 |
| D | Espresso (FD) | 2.50<br>62.5 | 3.50<br>87.5 | 4.15<br>105 | 4.50<br>112.5 | 5.00<br>127.5 | 6.00<br>153 | 7.00<br>175 | 8.00<br>205 | 9.00<br>225 | 10.00<br>255 |
| F | Tea | 5.00<br>125 | 7.00<br>175 | 8.25<br>210 | 9.00<br>225 | 10.00<br>255 | 12.00<br>305 | 14.00<br>355 | 16.00<br>405 | 18.00<br>370 | 20.00<br>505 |
| G | Chocolate | 5.00<br>105 | 7.00<br>145 | 8.25<br>170 | 9.00<br>185 | 10.00<br>205 | 12.00<br>245 | 14.00<br>290 | 16.00<br>330 | 18.00<br>370 | 20.00<br>410 |
| H | Soup | 5.00<br>115 | 7.00<br>165 | 8.25<br>195 | 9.00<br>210 | 10.00<br>235 | 12.00<br>285 | 14.00<br>330 | 16.00<br>380 | 18.00<br>425 | 20.00<br>475 |
| H | Soluble Product | 5.00<br>110 | 7.00<br>155 | 8.25<br>185 | 9.00<br>200 | 10.00<br>225 | 12.00<br>270 | 14.00<br>315 | 16.00<br>360 | 18.00<br>405 | 20.00<br>450 |
| X | Soluble Product | 5.00<br>110 | 7.00<br>155 | 8.25<br>185 | 9.00<br>200 | 10.00<br>225 | 12.00<br>270 | 14.00<br>315 | 16.00<br>360 | 18.00<br>405 | 20.00<br>450 |

This document is available free of charge to our customers at www.automaticproducts.com

# Recipes

## Cappuccino

Cappuccino is made with various ratios of chocolate to coffee, according to taste. Lightener (**E** timer) is also used for cappuccino. For an example, the default chocolate-to-coffee ratio of 15/85 in a 8.25 oz. cup consists of the following:

- A chocolate throw (**DR.2**) lasting .65 seconds, providing 15% of the normal chocolate throw (approximately 5.4 grams*).
- A water throw for the chocolate (**WA.2**) lasting 2.65 seconds (chocolate product throw plus 2 seconds to ensure the mixing bowl is fully rinsed). The volume is about 59 ml, depending upon how the flow rate is adjusted.
- A throw for cappuccino coffee (product **E**) equal to a normal coffee (product **A**) throw.
- A water throw for the freeze dry coffee selection (water **E)** lasting for 5.55 seconds (132 ml).

**- OR -**

- A water throw for the fresh brew coffee selection (water **E**) lasting for 5.55 seconds (153 ml). **In either case the water volume is enough to fill the remainder of the cup.**

The actual mixing sequence is as follows:

1. The coffee portion of cappuccino is made using the same canister/valve combination as the normal (**A**) coffee.
2. After the coffee is completely in the cup, the chocolate portion is made with the selection **G** canister/valve combination. This gives the drink its traditional "layering".

**Chocolate weights will vary with different products**

## Hints

To "fine tune" your Cappuccino drink to your exact taste, set a ratio close to what you like (between 5% and 50%). Adjust the individual timers using and until you are satisfied. You may find it necessary to cut down on the amount of sweetener available to a cappuccino drink with a high ratio of chocolate, as the chocolate contains sweetener of its own.

This document is available free of charge to our customers at www.automaticproducts.com

## Caffé Latte

*Caffé Latte has a rich, robust coffee flavor. It is a full-bodied hot beverage with extra creamer, whipped to frothy perfection, with sugar optional. Try this recipe to expand your gourmet product selections and increase premium pricing opportunities.*

**Enter The Supervisor Code:**

1. Press # CODE CLEAR. The display shows: **ENTER CODE**. You must enter the four-digit supervisor code within 6 seconds to gain access.

**NOTE**

A new machine has a factory-set supervisor code of 0000.

2. When you have entered the right code, you will hear two beeps and see **UNLOCKED** in the display.

**Set The Machine To Vend A Large "D" Selection:**

**NOTE**

Ensure that your machine has been configured for two separate cup sizes, and that the larger size is 12 oz. See "Set Up Cup Sizes" on page 55.

1. Press the following keys: 7 PRODUCT CONFIG., then ↓ until the display shows **1. ABCDEFGH**. Make sure the "**D**" is displayed. If not, press "**D**" on the selection switch panel to display the "**D**".

2. Press EXIT STOP twice to return to the standby message.

**Set Up Your Selection:**

**Drink Selection Setup Large Cup Sizes**

| | 12 OZ | | 14 OZ | | 16 OZ | | 18 OZ | | 20 OZ | |
|---|---|---|---|---|---|---|---|---|---|---|
| | TIME SEC. | FB / FD | TIME SEC. | FB / FD | TIME SEC. | FB / FD | TIME SEC. | FB / FD | TIME SEC. | FB / FD |
| WATER | 12 cup | 320/305 ml | 14 cup | 375/355 ml | 16 cup | 425/405 ml | 18 cup | 480/455 ml | 20 cup | 535/505 ml |
| COFFEE | 3.65 | 13.0/2.2 gm | 4.25 | 15.3/2.55 gm | 4.85 | 17.5/2.9 gm | 5.45 | 19.6/3.25 gm | 6.05 | 21.8/3.65 gm |
| SUGAR | 0.35 | 2.7 gm | 0.40 | 3.1 gm | 0.45 | 3.5 gm | 0.55 | 4.25 gm | 0.60 | 4.65 gm |
| EX SUGAR | 0.35 | 2.7 gm | 0.40 | 3.1 gm | 0.45 | 3.5 gm | 0.55 | 4.25 gm | 0.60 | 4.65 gm |
| LIGHTENER | 2.90 | 5 gm | 3.35 | 5.85 gm | 3.85 | 6.7 gm | 4.35 | 7.55 gm | 4.85 | 8.45 gm |
| EX LIGHTENER | 2.90 | 5 gm | 3.35 | 5.85 gm | 3.85 | 6.7 gm | 4.35 | 7.55 gm | 4.85 | 8.45 gm |
| STEEP TIME | 12.5 | | 12.5 | | 12.5 | | 12.5 | | 12.5 | |
| STEEP + TIME | 12.5 | | 12.5 | | 12.5 | | 12.5 | | 12.5 | |
| WHIP | ON + | | ON + | | ON + | | ON + | | ON + | |

This document is available free of charge to our customers at www.automaticproducts.com

To get these measurements, see "Collecting Dry Product Gram Throws" on page 59, and perform test throws of the dry ingredients. See "Collecting Hot Water Throws" on page 62, and perform test water throws.

## European Cappuccino

*Introducing a great new blended drink called EUROPEAN CAPPUCCINO: First, a portion of cappuccino topping mix (or lightener) is dispensed, then layered on top is a small serving of strong coffee.*

1. Replace product in the soup (or international coffee) canister with the lightener or cappuccino topping mix.
2. Press

. The display shows: **ENTER CODE**. You must enter the four-digit supervisor code within 6 seconds to gain access.

   **NOTE**

   A new machine has a factory-set supervisor code of **0000.**

   When you have entered the right code, you will hear two beeps and see **UNLOCKED** in the display.

   Press

.
3. Reconfigure the machine:
   a. Press

, then press until the display shows **D**- **J+ WXYZ**.
   b. **WXYZ** is the current configuration code, where W = the machine type, X = 6th product configuration, Y = brewer configuration, and Z = canister mapping. See "Set the Machine Type and Configuration Code" on page 53. You will be changing the number represented by X. The only way to do that is to change all four numbers, so at this time write down your configuration code so you will know where to start if you make a mistake.
   c. Replace "**X**" as follows:

| If your current value of X is: | Change it to: |
|---|---|
| 1 | 5 |
| 2 | 6 |
| 3 | 7 |
| 4 | 8 |

This document is available free of charge to our customers at www.automaticproducts.com

For example: If your current configuration code is **W 2 Y Z**, you will enter the numbers **W 6 Y Z**. Your new drink will be selected with the **H** key. Valid selections are **H3** (black) and **H4** (with sugar). After the reconfiguration, timers for the topping mix or lightener are under the **H** selection as **DR.2**, and the timers for the coffee serving are under the **H** selection. Now, you need to alter the water throw times for the two selections. Consult Table D1:"Machine Type Configuration" on page 53 for suggestions for a starting point for your new drink.

## Blended Selections

Two new blended selections are offered with the **Y** and **Z** keys. Any two base products, a primary and secondary, can be blended from 15% to 85% in 5% increments. The primary product is dispensed first followed by the secondary creating a 'layer.' To reverse the order dispensed to the cup, invert the primary and secondary products. The blended drink will support condiments if condiments are valid for either of the base products.

Blended selections are configured in the **BLEND** list item of the **PRODUCT CONFIG** list. The **Y** and **Z** keys select the blended selections from the **BLEND** list. Once the **Y** or **Z** key is pressed, you can select the blend selections and the percentage. The arrow keys toggle between the selection and percentage list items and the **1** and **2** keys edit the primary and secondary products, respectively.

For example to set up the **Y** blended selection:

1. Press 7 PRODUCT CONFIG. then press ↓ until the screen displays **BLEND** - *.
2. Press **Y**; the screen now displays **Y1.# Y2.# .** "#" represents the primary/secondary products currently selected.
3. Repeatedly press **1** until your selected primary product appears next to **Y1**. (NOTE: the selected secondary product will not be included in the available primary products list.)
4. Repeatedly press **2** until your selected secondary product appears next to **Y2**. (NOTE: the selected primary product will not be included in the available secondary products list.)
5. Press ↓. The screen displays **Y1 ** Y2 **** . "**" represents the percentage of the primary and secondary products selected.
6. Press **1** to increase the primary product percentage, or press **2** to increase the secondary product percentage. (NOTE: the alternate product percentage value is automatically changed to total 100%).

This document is available free of charge to our customers at www.automaticproducts.com

## View or Set the Hot Water Tank Temperature

1. Press 7 PRODUCT CONFIG. then ↓ until the display shows **SET 202° F**. In this example, **202°** is the water tank temperature setpoint in degrees Fahrenheit. If a decimal point appears next to the "**F**", the heater is on.
2. If desired, enter a new setpoint in the accepted range of 149° - 205° F (65° - 96° C).

**NOTE**

The lower limit for vending is 20° below setpoint, up to a maximum of 180° F (82° C).

3. To change display units (replace the "**F**" with a "**C**" for Celsius), press EDIT.
4. CONTINUE

## Set up Low Temperature Dispensing

1. Press 7 PRODUCT CONFIG. then press ↓ until the screen displays either:

   **LTDIS OFF**. Prohibits vending if water tank temperature falls 20 degrees below the set teperature. For example, with a setpoint temperature of 202º F, the machine will inhibit vending when the water tank temperature reaches 182º F.

   **- OR -**

   **LTDIS ON**. Allows vending to a water tank temperature of 140º F.

2. Press EDIT to change between **ON** and **OFF**.
3. CONTINUE

This document is available free of charge to our customers at www.automaticproducts.com

## Set up Low Power Settings

Low power settings allow for the water tank to be set to a lower temperature at up to 4 different dates and times.

For example, you want to lower the tank temperature to 160º F overnight on Mondays through Fridays. The machine tank temperature setpoint will be changed to 160º F at 6:00 pm and maintained at that temperature until 5:00 am on the following morning when the setpoint is returned to 202º F. Please keep in mind that at 5:00, the machine will just ***begin*** to increase to the 202º F setpoint temperature. It is up to you to determine how long that will take and to allow enough time for the tank to be at its proper temperature when the machine will be used. Typically, one hour is adequate to return to the normal operating temperature. NOTE: The machine **OUT OF SERVICE** condition during the low power interval will be determined by how you have set the **LTDIS** configuration.

1. Press 7 PRODUCT CONFIG. then press ↓ until the screen displays **LOW.PWR.- - - -** . Press the number of the time interval you want to edit, or EDIT to edit time interval 1 (we will use interval 1 for this example).
2. The display shows **LOW.PW ON** or **LOW.PW OFF**. This display tells you whether your time interval (represented by 1) is on or off. Press ↓ to change the condition of the time interval.
3. If you turn an interval **ON**, it must be edited. You can edit a time interval now, then turn it **OFF** until another time.
4. Press ↓. The display shows **1.STRT X.XX.** "**X.XX**" is the currently set start time. Enter a new start time (24-hour format) for this interval. To enter the time for 6:00 pm, enter **1800**.
5. Press ↓. The display shows **1.STOP X.XX.** "**X.XX**" is the currently set stop time. Enter a new stop time (24-hour format) for this interval. To enter the time for 5:00 am, enter **0500**.
6. Press ↓. The display shows **1.@ - - - - - - -** . The dashes represent the days that this time interval is active. Pressing number keys **1** through **7** switches the days on/off. For example, press "**2**", "**3**", "**4**", "**5**", and "**6**". The display now shows **1.@ - M T W T F -**. This interval is active on Monday through Friday.
7. Press ↓. The display shows **1. MESG OFF** or **1. MESG X.** "**OFF**" means there is no custom message selected, and "**X**" represents the custom message number set for this interval. Press the number key of the message (**1** through **8**) you want displayed. To edit this message, press EDIT and follow the procedure given in "EDIT CUSTOM MESSAGE" ON PAGE 77. Press **0** to turn the message **OFF** for this time interval.
8. Press ↓. The display shows **L.PWR 202**.
9. Press **1**, **6**, and **0**. The screen displays **L.PWR 160**.
10. CONTINUE

This document is available free of charge to our customers at www.automaticproducts.com

## Set the Automatic Brewer Rinse Time

### (Brewer Equipped Machines Only)

The brewer will be automatically rinsed by one of two methods: You can specify a set time of day when the brewer is rinsed, or you can specify that rinsing takes place a set time after the last brewed selection is vended.

1. Press 7 PRODUCT CONFIG. then ↓ until the display shows one of the following:

   **SAN.TIM 4.5** - The time of day (in hours and tenths of hours) the machine rinses the brewer. In this example, brewer rinse takes place each day at 4:30 am. Range: 0.0 - 23.9 in 0.1 hour (6 minute) increments.

   **- OR -**

   **SAN.HRS 2.5** - In this example, brewer rinse takes place 2.5 hours after the last vend. Range: 2.0 - 12.5 hours, in 0.1 hour (6 minute) increments.

   **NOTE**

   If 24 hours passes without a vend, no rinsing will take place.
   This eliminates unnecessary rinsing over a weekend or holiday.

2. Whichever one of the two choices is displayed is the method by which the brewer will be rinsed.

   Press EDIT to switch between these two displays. Enter a new time, if desired.

3. CONTINUE

## Set the Bowl Rinse Time

Mixing bowl(s) can be automatically rinsed by one of two methods: You can specify a set time of day when the bowl is rinsed, or you can specify that rinsing takes place a set time after the last selection is vended.

This document is available free of charge to our customers at www.automaticproducts.com

1. Press 7 PRODUCT CONFIG. then ↓ until the display shows one of the following:

   **RIN.HRS 2.5** - This is how soon the machine rinses the bowls after a vend. In this example, bowl rinse takes place 2.5 hours after the last vend. Range: 2.0 - 12.5 hours, in 0.1 hour (6 minute) increments.

   **- OR -**

   **RIN.TIM 4.5** - The time of day (in hours and tenths of hours) the machine rinses the bowls. In this example, bowl rinse takes place at 4:30 am. Range: 0.0 - 23.9 in 0.1 hour (6 minute) increments.

   **NOTE**

   If 24 hours passes without a vend, no rinsing will take place.
   This eliminates unnecessary rinsing over a weekend or holiday.

   **- OR -**

   **RINSE OFF** - No bowl rinse takes place.

2. Press EDIT to switch between these options, and the number keys to enter new values.

3. CONTINUE

## Turn SureVend™ On or Off

1. Press

then until the display shows one of the following:

   **SURE.V OFF** - None of the SureVend™ functions are available. Use this if the SureVend™ system is not installed, or there is some reason you do not want to use it (for example, in a high cup theft situation).

   **SURE.V ON** - The SureVend™ system is operative. All of the SureVend™ functions are available.

2. Press

to switch between the two choices.

3. CONTINUE

## Optional or Mandatory SureVend™

1. Press

then until the display shows one of the following:

   **OPT'N SURE.V** - The machine reverts to home switch operation of the ring motors if the SureVend™ system cannot operate normally because of an obstruction in the cup station or for any other reason.

   **MUST SURE.V** - The vending machine is operational only if the SureVend™ system is determined to be working. Otherwise, the machine will go temporarily out of service until the blockage or other error is corrected.

2. Press

to switch between the two choices.

3. CONTINUE

This document is available free of charge to our customers at www.automaticproducts.com

## Set Up the SureVend™ Anti-Jackpot Timer

1. Press

then until the display shows **AJP.TMR XXM**. "**XX**" represents how many minutes SureVend™ will be disabled for either cup ring. The same value applies to the two timers (one on each ring).
2. Enter a number using either keypad.

   If any cup ring motor fails to deliver a cup on two consecutive attempts, the cup ring goes out of service. After the time set in step 2 has elapsed, the cup ring goes back in service and is given one more chance to deliver a cup. If cup delivery is again unsuccessful, the ring goes out of service until the machine is serviced. A successful delivery on any cup ring will reset the failed attempts for that particular cup ring. If both cup rings perform three consecutive failed attempts (and the SureVend™ sensor is determined to be working), the entire machine goes in the "mug only" mode until the machine is serviced. If either cup ring performs three consecutive failed attempts with the other cup ring in anti-jackpot timer mode, the entire machine will be in "mug only" mode (assuming SureVend™ is working) until the preset time elapses (one more attempt will be made to deliver a cup) or the machine is serviced by a route operator.

**NOTE**

A setting of "**00**" will disable this feature. A setting of "**99**" will disable the ring until the next service call.

### Conditions:

If the cup sizes are the same, the machine alternates ring motor cycles until either a cup is detected or both rings reach two consecutive failed attempts.
If the cup sizes are different, the selected ring is cycled up to two times before returning credit. If the customer selects a large size drink and that ring is out of service, the customer gets a small drink (if in service) and receives change.

## View Software Version

1. Press

, and press until the display shows **VER XXXXXX.**

   "**XXXXXX**" represents the current software version number.
2. CONTINUE

This document is available free of charge to our customers at www.automationproducts.com

## Set the Time of Day

1. Press

. The display shows **TIME HH.MM**. "**HH.MM**" is the time of day in 24-hour format.
2. Enter the current time using the number keys.

**NOTE**

9:00 am is entered with a leading zero, like this: **0900**; 9:00 pm is entered as **2100**.

3. CONTINUE

## Set the Day of the Week

1. Press

, and press until the display shows @ **SMTWTFS**. The letter representing the currently set day of the week will be flashing.
2. Press

until the correct day of the week is flashing.
3. CONTINUE

## Set Month, Date, and Year

1. Press

, and press until the display shows **MM/DD YY.** "**MM**" is the month, "**DD**" is the date, "**YY**" is the year.
2. Enter the current month, date, and year using the number keys.
For example, press the following keys to enter February 15, 2002: **0**, **2**, **1**, **5**, **0**, **2**.
3. Press

to switch between **MM/DD** and **DD/MM** formats.
4. CONTINUE

## Set Time-of-Day Inhibit Vending

Vending can be inhibited up to four times a day.

1. Press

, then press until the display shows **INHIB - - - -**.
2. See "Time Interval Editing" on page 74 for an example of how to set up time-of-day inhibited vending.

This manual is available free of charge to our customers at www.dixellproducts.com

## Set Time-of-Day Free Vending

1. Press 8 TIME OF DAY, then press ↓ until the display shows **FREEV - - - -** .
2. See "Time Interval Editing" below for an example of how to set up time-of-day free vending.

## Set Time-of-Day Discount Vending

1. Press 8 TIME OF DAY, then press ↓ until the display shows **DISCT - - - -** .
2. See "Time Interval Editing" below for an example of how to set up time-of-day discount vending.

## Time Interval Editing

You can select up to four times of day for each special vending period.

**NOTE**

If two or more of these time periods overlap, the interval with the highest priority will overrule the other(s). This order of precedence is:

1. INHIBIT
2. FREEVEND
3. DISCOUNT

For example, if a DISCOUNT time period is scheduled for a certain area before the end of an INHIBIT time period, DISCOUNT does not begin until the INHIBIT interval has ended for that area.

The time interval editing procedure is almost the same for the INHIBIT, FREEVEND, and DISCOUNT intervals. There is one difference for the DISCOUNT time interval, so we will use it in our example. Assume you just finished the SET TIME-OF-DAY DISCOUNT VENDING procedure. Step 1 picks up where you left off . . .

charge to our customers at
www.automaticproducts.com

1. The display shows **DISCT - - - -** . Press the number of the time interval you want to edit, or EDIT to edit time interval 1 (we'll use interval 1 for this example).
2. The display shows **1.DISCT ON** or **1.DISCT OFF** This display tells you whether your time interval (represented by 1) is on or off. Press EDIT to change the condition of the time interval.
3. Press ↓ . The display shows **1.DSCT X** . "**X**" represents the discount percentage for this period. Enter a discount percentage of **25** with the number keys. (Discount percentages of from 0 to 99 are permitted.) The machine will apply a 25% discount to each price, rounding up to the nearest nickel (or whatever is the smallest coin accepted by the coin mechanism).
4. Press ↓ . The display shows **1.STRT X.XX** . "**X.XX**" is the currently set start time. Enter a new start time (24-hour format) for this interval. To enter the time for 3:30 pm, enter **1530**.

5. Press . The display shows **1.STOP X.XX** . "**X.XX**" is the currently set stop time. Enter a new stop time (24-hour format) for this interval. To enter the time for 6:00 pm, enter **1800**. You have now established a 25% discount that starts at 3:30 pm and ends at 6:00 pm.

6. Press . The display shows **1.@ - - - - - - -** . The dashes represent the days that this time interval is active. Pressing number keys **1** through **7** switches the days on/off. For example, press "**2**", "**4**", and "**6**". The display now shows **1.@ - M - W - F -** . This discount interval is only active on Monday, Wednesday, and Friday.

7. Press . The display shows ***** **- - - - - - - - - -** . The dashes represent the trays affected by this time interval. Press the appropriate letter key to enable a tray, press the key again to disable it. For example, pressing **A**, **C**, and **E** will cause the display to look like this: **A** - **C** - **E** - - - - , meaning that all A, C, and E selections are affected by this interval.

   Press

   to turn on all levels; press

   to turn all levels off.

8. Press . The display shows **1. MESG OFF** or **1. MESG X**. "**OFF**" means there is no custom message selected, and "**X**" represents the custom message number set for this interval. Press the number key of the message (**1** through **8**) you want displayed. To edit this message, press

   and follow the procedure given in "Edit Custom Message" on page 77. Press **0** to turn the message OFF for this time interval.

9. CONTINUE

This document is available free of charge to our customers at www.automaticproducts.com

## Select a Standby Message

| | |
|---|---|
| **STANDBY MESSAGE** | The message that is displayed during normal vending periods when there are no out-of-service faults on the machine. |

1. Press 8 TIME OF DAY, then press ↓ until the display shows **STANDBY XX**. "**XX**" represents the current message number selected for the standby message. Two dashes mean that the factory-set message is selected.
2. To select a message, just press the corresponding number (**1** through **8**). To display the factory-set message, press **0**.
3. The selected message (except the factory-set message) can be edited. To do this, press EDIT and follow the procedure given in "Edit Custom Message" on page 77.
4. CONTINUE

## Select an Out-of-Service Message

1. Press 8 TIME OF DAY, then press ↓ until the display shows **SERVICE XX**. "**XX**" represents the current message number selected to display when the machine is out-of-service. Two dashes mean that the factory-set message is selected.
2. To select a message, just press the corresponding number (**1** through **8**). To display the factory-set message, press **0**.
3. The selected message (except the factory-set message) can be edited. To do this, press EDIT and follow the procedure given in "Edit Custom Message" on page 77.
4. CONTINUE

Manuals available free of charge to our customers at www.automaticproducts.com

## Select a Freevend Message

1. Press 8 TIME OF DAY, then press ↓ until the display shows **FREEV XX**. "**XX**" represents the current message number selected for the message that displays when the machine is in the freevend mode. Two dashes mean that the factory-set message is selected.
2. To select a message, just press the corresponding number (**1** through **8**). To display the factory-set message, press **0**.
3. The selected message (except the factory-set message) can be edited. To do this, press EDIT and follow the procedure given in "Edit Custom Message" on page 77.
4. CONTINUE

## Edit Custom Message

1. Press 8 TIME OF DAY, then press ↓ until the display shows **EDIT MSG'S**. Press the number of the message you want to edit. **Message X** is displayed ("**X**" represents the message number you pressed).

**NOTE**

Custom message **8** represents the **INSERT MUG** message.

2. Press EDIT. The message text is displayed with the first character flashing.
3. To view the message, press TEST START. The message scrolls across the display. To stop the scrolling, press EDIT.
4. When the character you want to change is flashing, either enter it directly, or use 3 F1 + and 6 F2 - to step through the character set until the desired character is displayed. Use the arrow keys to highlight different characters. See the section on the next page for an explanation of special keys and the character set.

**SHORTCUT**

Instead of stepping through the whole character set to enter a letter that is not on your keypad, enter one close to the one you want, then step to it. Example: If you want to enter an **L**, first press 1 PRICE, then press 6 F2 - six times. Your **L** should now be displayed.

This document is available free of charge to our customers at www.automaticproducts.com

**The End Of Message Character**

This is the most important character in your message, because it tells the machine when the message is ended.
If you don't use this character, your message will be followed by a bunch of zeros. This character can be selected either from the character set or by a direct key entry.
(see "Entering Your Message" on page 78)

## Entering Your Message

Most of the keys on the control panel have a special purpose to help you create and edit your messages:

1 PRICE — Inserts an **R** at the flashing character.

2 FREE VEND / INSERT — Inserts a space at the flashing character.

4 MACHINE CONFIG. — Inserts an **S** at the flashing character.

5 DATA RECALL / DELETE — Deletes the current character and closes up the space.

7 PRODUCT CONFIG. — Inserts a **T** at the flashing character.

# CODE / CLEAR — Deletes the current character and leaves the space.

8 TIME OF DAY — Repeats the letter to the left of the flashing character.

9 PAY — Enters the special "end of message" character, which denotes the end of the message.

EDIT — "Pages" through the message, ten characters (one screen) at a time.

Steps forward and backward through the message, one character at a time.

3 F1 + / 6 F2 - — Steps forward and backward through the character list, one character at a time.

| | | | | | |
|---|---|---|---|---|---|
| **0** | **A** | **J** | **U** | **(** | |
| **1** | **B** | **L** | **V** | **)** | |
| **2** | **C** | **M** | **W** | **#** | |
| **3** | **D** | **N** | **X** | **P** | |
| **4** | **E** | **O** | **Y** | **+** | |
| **5** | **F** | **P** | **Z** | **-** | **>** |
| **6** | **G** | **Q** | (SPACE) | **/** | **?** |
| **7** | **H** | **R** | **_** | **.** | **@** |
| **8** | **I** | **S** | **$** | **<** | **O** |
| **9** | **J** | **T** | **‘** | **=** | |

This document is available free of charge to our customers at www.automationproducts.com

## View Water Tank Temperature

1. Press . The display shows **XXX °F** . "**XXX**" is the current water tank temperature. "° F" means that the temperature is displayed in degrees Fahrenheit (may be shown in degrees Celsius, depending upon your choice. (See "View or Set the Hot Water Tank Temperature" on page 68). A decimal point shown in the display indicates that the tank heater is operating.
2. CONTINUE

## View Machine Type/Configuration Setting

1. Press , then press until machine shows **MACH.TYPE** , then press until the display shows **D**- **J**- **PQRS**. **P**, **Q**, **R**, and **S** represent settings specific to your machine. See "SET THE MACHINE TYPE AND CONFIGURATION CODE" ON PAGE 53 for an explanation of this display.
2. Press . The display shows **0. ABCDEFGH**. This shows the active selections for the regular size drink (**0**).

**NOTE**

Press to display the remaining selections: **0 X - - - 2 - - - - .**

If you have only one cup size in your machine, you will not see the next display.

3. Press . The display shows **1. ABCDEFGH**. This shows the active selections for the large size drink (**1**).

This document is available free of charge to our customers at www.automaticproducts.com

**NOTE**

Press to display the remaining selections: **1 X - - - 2 - - - - .**

4. CONTINUE

## View Cup Sizes Assigned to Selections

1. Press

, then press
until the display shows **0. - - C - - - G -** . This example shows that regular size cups are assigned to selections **C** & **G** .

**NOTE**

If you have only one cup size in your machine, you will not see the next display.

2. Press
. The display shows **1. ABC- - FGH** . This example shows that large size cups are assigned to selections **A** thru **C** and **F** thru **H**.
3. CONTINUE

## Payout Coins

1. Press

. If a dumb mech was selected, the display shows **NDQ=123**; if an MDB mech was selected the display shows **PAY 123**.
2. Press

. A dumb mech pays out one nickel; an MDB mech pays a coin from tube 1. Press

. A dumb mech pays out one dime; an MDB mech pays a coin from tube 2. Press

. A dumb mech pays out one quarter; an MDB mech pays a coin from tube 3.
3. To continuously pay out coins, hold down the appropriate key.
4. CONTINUE

This document is available free of charge to our customers at www.automaticproducts.com

## Set Prices

1. Press

. The display shows ** **2.50 .25**. This display shows the maximum and minimum prices set in the machine. In this example, the maximum price is $2.50 and the minimum is $0.25.
2. Enter prices as using one of the following methods:

### Set Entire Machine To One Price

Press

. The display shows ** **X.XX** . Enter a price using the number keys. All selections in the machine are now set to this price.

### Set The Price Of An Individual Selection

a. Press the number of the selection to be priced. (Example: **1A**.) The display shows **1A X.XX** . Enter a price using the number keys. The selection is now priced.

b. Press another letter key, or to price another selection.

3. CONTINUE

## View Nonresettable Sales and Vend Data

1. Press

. The display shows **NR$ XX.XX** . "**XX.XX**" is a dollar and cents figure showing the total of all sales in the machine. This is a running total, and is not resettable.
2. Press . The display shows **NR X** . "**X**" is the total number of vends made by the machine. This is a running total, and is not resettable.
3. CONTINUE

This document is available free of charge to our customers at www.automaticproducts.com

## View Data Three Different Ways

Paid sales and vends can be viewed three different ways: By whole machine, by selection, and by drink size within the selection. The first screen of the data item shows its machine total.

1. To view the data by selection, press the letter of the selection you want to see. You can then press and to see data for all the active selections.
2. To view the data by drink size:
   a. Press **0** for regular size drinks or **1** for large size drinks.
   b. Press the letter of the selection you want to see.

**For Example:**

To view the data for a large **A** selection, press **1A**. The data will be displayed.

3. You can then press and to see data for all the active selections of that size.

## View Total Paid Sales

1. Press

, then press until the display shows ****$ XX.XX** . "**XX.XX**" is a dollar and cents figure showing the total of all PAID sales in the machine (as opposed to unpaid sales like winner and free vends). This is the total since the last time it was cleared.
2. If desired, view this data by individual selection or drink size.
3. CONTINUE

This document is available free of charge to our customers at www.automaticproducts.com

## View Total Paid Sales by Price Line

1. Press

, then press until the display shows ****$ XX.XX** .
2. Press

. The display shows **.30'3430.50**. This is an example of a price line for items priced at $0.30. The amount following the apostrophe ('), is the total dollar amount of the sales for this specific price. In this example, there was total sales of $3,430.50 for the $0.30 item.
3. Press repeatedly to view all price lines.
4. CONTINUE

## View Total Paid Vends

1. Press

, then press until the display shows **** XX** . "**XX**" is the total number of paid vends for the entire machine.
2. If desired, view this data by individual selection or drink size.
3. CONTINUE

## View Total Paid Vends by Price Line

1. Press

, then press until the display shows **** XX** .
2. Press

. The display shows **.30'11435** . This is an example of a price line for items priced at $0.30. The amount following the apostrophe ('), is the total number of vends for this price. In this example, there was a total of 11,435 vends of the $0.30 item.
3. Press repeatedly to view all price lines.
4. CONTINUE

## Clear All Resettable Data

1. Press

. The display shows **NR$ XX.XX** . This is a running total, and is not resettable.
2. Press and hold

. Two beeps sound and the display shows **CLEARING** momentarily, and then changes to **FINISHED**. All data is cleared.
3. CONTINUE

This document is available free of charge to our customers at www.automaticproducts.com

## Clear Paid Sales Data Only

1. Press

, then press until the display shows ****$ XX.XX** . "**XX.XX**" is a dollar and cents figure showing the total of all PAID sales in the machine (as opposed to unpaid sales like winner and free vends). This is the total since the last time it was cleared.
2. Press and hold

. Two beeps sound and the display shows **CLEARING** momentarily, and then changes to **FINISHED**. All paid sales data is cleared; other data is not cleared.
3. CONTINUE

## View Amount in Coin Box

### (Not Shown If Zero)

1. Press 5 DATA RECALL DELETE, then press ↓ until the display shows **CBX XX.XX** . "**XX.XX**" is the dollar and cents amount in the coin box.
2. CONTINUE

## View Amount in Validator

### (Not Shown If Zero)

1. Press 5 DATA RECALL DELETE, then press ↓ until the display shows **DBV XX.XX** . "**XX.XX**" is the dollar amount in the bill stacker.
2. Press EDIT to show the quantities of bills in the stacker. For example, the display shows **$01 20** , meaning that there are 20 dollar bills in the bill stacker. Press EDIT again to show the quantities of other bills, such as $5s, $10s, or $20s.
3. CONTINUE

## View Freevend Sales by Time Interval

### (Not shown if zero)

1. Press 5 DATA RECALL DELETE, then press ↓ until the display shows **-0$ XX.XX** .
2. Press EDIT, then press ↓ until the display shows **1.FRV .00** . This is the total sales for freevend interval 1, shown even if zero.
3. Press ↓ to view intervals 2 through 4.
4. CONTINUE

This document is available free of charge from
www.automaticproducts.com

## View Discount Sales by Time Interval

### (Not Shown If Zero)

1. Press

, then press until the display shows ****$ XX.XX .**
2. Press

. The display shows **1.DSC .00** . This is the total sales for discount interval 1.

   Press to view intervals 2 through 4.
3. CONTINUE

## View Free Vends

1. Press

, then press until the display shows **-0$ XX.XX** .
2. Press

, then press until the display shows **FRV XX.XX** . "**XX.XX**" is the total machine-wide freevends, shown even if zero.
3. CONTINUE

## View Winners

1. Press

, then press until the display shows **-0$ XX.XX** .
2. Press

, then press until the display shows **WIN XX.XX** . "**XX.XX**" is the total machine-wide winners, shown even if zero.
3. CONTINUE

This document is available free of charge to our customers at www.automaticproducts.com

## View Time Data

1. Press

, then press until the display shows **TIME DATA .**

2. Press

. The following message scrolls across the display: **MAIN.1 237M 01/30 10.13** .

   This example shows the latest time interval the main (machine) door was open (**1**). It was open for 237 minutes (**237M**), and was opened on January 30 (**01/30**) at 10:13 am (**10.13**). Press . If applicable, similar displays will appear for intervals 2, 3, and 4. Otherwise, go to the next step.

3. Press . The following message scrolls across the display:

   **LAST POWER 01/30 13.51 FOR 00. 0.23** .

   This example shows that the last time the machine lost power was on January 30 (**01/30**) at 1:51pm (**13.51**) for zero days, zero hours, and 23 minutes (**00. 0.23**).

4. Press . The following message scrolls across the display:

   **LONGS.T POWER 01/30 10.58 FOR 00. 2.47** .

   This example shows that the longest time the machine was without power was on January 30 (**01/30**) at 10:58am (**10.58**) for zero days, 2 hours and 47 minutes (**00. 2.47**).

5. Press . The following message scrolls across the display: **FULL CLEAR 01/30 8.58** .

   This example shows that the last time resettable sales was fully cleared was on January 30 (**01/30**) at 8:58am (**8.58**).

6. Press . The following message scrolls across the display: **TIME SET 01/30 9.15** .

   This example shows that the last time the time or date was set was on January 30 (**01/30**) at 9:15 am (**9.15**).

7. Press . The following message scrolls across the display: **PRICE SET 01/30 9.42** .

   This example shows that the last time prices were set was on January 30 (**01/30**) at 9:42 am (**9.42**).

8. CONTINUE

**NOTE**

Refer to "View Data Three Different Ways" on page 82 to view the date and time of the last vend of that selection.

This document is available free of charge from
www.automaticproducts.com

## View Total Unpaid Sales

### (Not Shown If Zero)

1. Press

, then press
until the display shows **_0$ XX.XX** . "**XX.XX**" is the total unpaid sales (free vends, winner vends, 100% discounts, zero price vends) for the entire machine.
2. If desired, view this data by tray and individual selection.
3. CONTINUE

## View Total Unpaid Vends

1. Press

, then press
until the display shows **_0 XX .** "**XX**" is the total number of unpaid vends for the entire machine.
2. If desired, view this data by tray and individual selection.
3. CONTINUE

## View Number of Test Vends

### (Not Shown If Zero)

1. Press

, then press
until the display shows **TST X** . "**X**" is the number of test vends.
2. If desired, view this data by tray and individual selection.
3. CONTINUE

This document is available free of charge to our customers at www.automaticproducts.com

## View Number of Mug Vends

### (Not Shown If Zero)

1. Press

, then press
until the display shows **MUG X** . "**X**" is the number of mug vends.
2. If desired, view this data by tray and individual selection.
3. CONTINUE

## View Number of Alt Vends

An ALT VEND occurs when a smaller cup size is unavailable and the machine vends the smaller selection by using a larger cup. The customer will get the larger cup, but receive the smaller volume of product (at the small cup price). To view the number of ALT VENDS,

1. Press

, then press or until the display shows **ALT X** . The "**X**" is the number of larger cups used to fill smaller selections.
2. CONTINUE

## View Machine ID Number

1. Press

, then press or until the display shows **I.D. XXXXXX** . The "**X**"s represent the 6-digit machine ID number.
2. You can edit the machine ID number if the supervisor access code has been previously entered (see "Gain Access To The Supervisor Mode" on page 43).
3. CONTINUE

## View Cup Ring Cycles Related to SureVend™

### (Not shown if zero)

1. Press

, then press until the display shows **SV.TOT XX** . "**XX**" represents the number of vends during which more than one ring cycle was required to successfully dispense a cup.
2. Press

to clear the count.
3. CONTINUE

This document is available free of charge to our customers at www.automaticproducts.com

## View Times No Cup Was Detected After a Cup Ring Cycled

### (Not shown if zero)

1. Press

, then press
until the display shows **SV.FL1 XX** . "**XX**" represents the number of times a cup was not detected after ring 1 cycled. Check the cup ring adjustment (see "Tell the Machine About the Cup Size(s)" on page 22), or the cup stack for damage if the count is excessive.
2. Press

to clear the count.
3. Press
until the display shows **SV.FL2 XX** . "**XX**" represents the number of times a cup was not detected after ring 2 cycled. Check the cup ring adjustment (see "Tell the Machine About the Cup Size(s)" on page 22), or the cup stack for damage if the count is excessive.
4. CONTINUE

## View Home Switch Usage Related to SureVend™

### (Not shown if zero)

1. Press

, then press
until the display shows **WO.SV XX** . "**XX**" represents the number of times home switches were used due to **OPT'N SURE.V** selected but not working.
2. CONTINUE

## Test Vend Selections and Verify Credit Added

1. Press

. The display shows **TEST .00** . You may now test vend selections. If you insert money into the machine, the zeros in the display will be replaced with the amount of the credit. After the item vends, your money will be returned.

**NOTE**

SureVend™ is not operational during a test vend. You may make one more test vend if you close the door while still in **TEST VEND** mode.

2. CONTINUE

This document is available free of charge to our customers at

## Test the Display

1. Press

, then press
until the display shows **DSPLY TEST**. The "DRINK BEING SERVED" lamp is lighted (if so equipped), and remains lighted until you leave this function.
2. Press

to light all display segments; press

to turn them off.
3. Pressing a **NUMBER KEY** on the control panel causes all segments to display that character.
4. CONTINUE

## Test Drop a Cup

1. Press

, then press
until the display shows **CUP TEST**.
2. Press

to drop a cup.
3. CONTINUE

## Test the Whipper(s)

1. Press

, then press
until the display shows **WHIP TEST**.
2. Press the number key that corresponds to the whipper you want to test. It will run for one cycle.
3. CONTINUE

This document is available free of charge to our customers at www.automaticproducts.com

## Test the Grinder(s)

1. Press

, then press
until the display shows **GRIND TEST**.
2. Press the number key that corresponds to the grinder you want to test. It will run for one cycle.
3. CONTINUE

## Test the Automatic Delivery Door

1. Press

, then press
until the display shows **DOOR TEST** .
2. Press

. The automatic delivery door operates.
3. CONTINUE

## Test the Air

1. Press

, then press
until the display shows **AIR TEST** .
2. Press

to run the air compressor.
3. CONTINUE

## Test the Brewer

1. Press

, then press
until the display shows **BREW TEST** .

**WARNING**

**Keep away from the brewer mechanism while it is operating.**
**Coming into contact with moving parts could injure you.**

charge to our customers at
www.automaticproducts.com

2. Press to test each brewer position:

   **BREW'R BREW** = The brewer is in the BREW POSITION.
   **BREW'R HOME** = The brewer is in the HOME position.
3. CONTINUE

## Rinse the Mixing Bowls

1. Press

, then press until the display shows **BOWL RINSE** .
2. Press

to rinse the mixing bowls. The display shows **RINSING** until the operation is complete.
3. CONTINUE

## Rinse the Brewer

1. Press

, then press until the display shows **BREW RINSE**.
2. Press

to rinse the brewer. The display shows **RINSING** until the operation is complete.
3. CONTINUE

## Test Switches or Sensors

1. Press

, then press until the display shows **IN.MKPHL12** .
2. Actuate each switch or sensor to test its function:

   **M** = mug/cup sensor (if equipped)
   **K** = freevend keyswitch
   **P** = waste pail switch
   **H** = high water tank level switch
   **L** = low water tank level switch
   **1** = ring 1 cup sensor switch
   **2** = ring 2 cup sensor switch

   As you actuate each input, the display element representing that switch blinks on. Releasing the switch causes that element to blink off again.
3. CONTINUE

This document is available free of charge to our customers at www.automateproducts.com

## View SureVend™ Last Recorded Calibration Value

1. Press

SureVend until the display shows **CAL.LST XXX** . " **XXX**" can be any number from 0 to 255, and represents the most recent value read from the sensor. The lower the number, the greater the sensor blockage. A number of 255 means that there is a fatal problem with the SureVend™ interface board. Ensure the SureVend™ interface PCB is properly connected to the main controller PCB.
2. CONTINUE

## View SureVend™ Average Calibration Value

1. Press

, then press
until the display shows **CAL.AVE XXX** . "**XXX**" represents the average sensor calibration value (should be between 50 and 255 for proper sensor operation - i.e. 51 through 254). Although this number could go as low as 20, the SureVend™ system will be inoperative in this condition.
2. CONTINUE

## Clear Tank Errors and Fill the Tank

1. Press

, then press
until the display shows **TANK FILL** .
2. Press

. This clears any tank error and starts filling the tank, if necessary. If it is taking a long time to fill the tank AND THERE ARE NO LEAKS, you may see **TANK ERR** in the diagnostic list again. Just press

again after making sure there are no other problems, such as a restriction in the water inlet line or a clogged water filter.
3. CONTINUE

This document is available free of charge to our customers at www.automaticproducts.com

## View Diagnostic Messages

1. Press

. The display shows any of the following diagnostic messages, depending upon any fault(s) present:

| | |
|---|---|
| **NO ERRORS** | None of the following errors are detected: |
| **KEYPAD XY** | Key(s) **X**, **Y** stuck. |
| **ROM ERROR** | Error in the programming EPROM. Machine will not operate. |
| **RAM ERROR** | RAM is not initialized or is not compatible with the currently loaded software. If this message appears, initialize your RAM by performing the following procedure: |

**CAUTION**

Initializing RAM will erase all your data and drink settings.
Be sure you have written this information down before continuing.

2. Press AND HOLD

until two beeps are heard, and the display shows **FINISHED**.

| | |
|---|---|
| **LOCKS SET** | All selection keys are locked out. |
| **KEYSWITCH** | The keyswitch input is active and configured as an inhibit. |
| **MACH.TYPE 0** | Machine type error displays machine type screen.<br>NOTE: This is the actual machine type screen. You may enter the correct machine type number directly on this screen without further action. |
| **D+J+WXYZ** | Configuration error; displays the machine configuration screen. |

**NOTE**

This is the actual config screen. You may enter the correct config number directly on this screen without further action. (Verify cup size and product times in the product configuration screen).

This document is available free of charge to our customers at www.automaticproducts.com

| | |
|---|---|
| **TANK ERR** | Tank failed to fill or refill. |
| **RING 1, 2** | The cup ring is jammed. |
| **MTR 1A1B2X** | Cup turrets are jammed |
| **NO CUPS 1, 2** | Out of cups. |
| **BREW JAM** | The brewer is jammed. |
| **WASTE PAIL** | The waste pail is full. |
| **LOW WATER** | The water level in the tank is low. |
| **COLD WATER** | Water in the tank is too cold to vend. |
| **NO SENSOR** | Temperature sensor failed or missing. |
| **NO FLOAT** | Float sensor failed or missing. |
| **WHIP 1 2 3 4 5** | Whipper motor failure (motor 1, 2, 3, 4, 5). |
| **DOOR JAM** | The automatic delivery door is jammed. |
| **NO MECH** | Coin mech not detected - machine will not operate if configured for coin mech. |
| **MECH COMM** | Incomplete coin mech communications — check harness. |
| **MECH.SENSOR** | Coin mech reporting a bad tube sensor — replace mech. |
| **MECH ROM** | Replace the coin mechanism. |
| **MECH.ACCEPT** | Coin mechanism acceptor section is unplugged from the main body of the coin mech. Connect the cable and cycle machine power OFF and then ON. |

| | |
|---|---|
| **MECH JAM** | One or more coin tubes are jammed. Pay a coin from each tube until the jam is cleared. |
| **DEBIT CARD** | Card reader reporting error — machine will not operate if configured for DEBIT ONLY. |
| **CHECK DBV** | Bill validator reporting error — machine will not operate. Empty stacker, clear jams, etc. |
| **DBV COMM** | Incomplete bill validator communications — check harness. |
| **DBV MOTOR** | One of the motors has failed. The unit will disable itself until the error is corrected. Check for bill stuck in the acceptance path. If no bill is present, replace the validator. Cycle machine power OFF and then ON. |
| **DBV SENSOR** | One of the sensors in the bill validator has failed. The unit will disable itself until the error is corrected. Check for bill stuck in the acceptance path. If no bill is present, replace the validator. Cycle machine power OFF and then ON. |
| **DBV JAM** | A bill is jammed in the acceptance path. The unit will disable itself until the error is corrected. Remove bill stuck in the acceptance path. Cycle machine power OFF and then ON. |
| **DBV STACKR** | The stacker is open or removed. The unit will disable itself until the error is corrected. Install the stacker correctly. |
| **CHK PRICE** | Price error detected and changed to maximum - check prices. |
| **NONE READY** | all selections are reported out of service. |
| **SV.ERR CUP 1** | Cup ring 1 is out of service due to a SureVend™ error. |
| **SV.ERR CUP 2** | Cup ring 2 is out of service due to a SureVend™ error. |
| **SV.ERR PCB** | SureVend™ is ON but not working. The last calibration sample was 255. Check that the SureVend™ PCB is present at J34. |
| **SV.ERR SNSR** | SureVend™ is ON but not working. The last calibration sample was ≤50. Check for a blocked sensor or disconnected harness. |
| **AJP.TMR1 XX** | SureVend™ is active and ring 1 anti-jackpot timer is ON. XX is a value between 1 and 99 in minutes. |
| **AJP.TMR2 XX** | SureVend™ is active and ring 2 anti-jackpot timer is ON. XX is a value between 1 and 99 in minutes, and represents the amount of time left on the anti-jackpot timer for this cup ring. |
| **FLTR PAPER** | Brewer filter paper is empty. |
| **NO BREWER** | Brewer is missing or malfunctioning. |
| **BREWER.ERR** | The brewer is in an incorrect position. |
| **BREWER JAM** | The brewer has not reached an appropriate position within a certain timeout period. Check for a physical jam or a motor stall condition. |
| **RESET BRWR** | The brewer is clamped and not vending, or is not in a brewer test mode. Close the door (if open), or run a brew test. |

This document is available free of charge for our customers at www.vendingproducts.com

## Download Data To a PDCD

1. Connect your portable data collection device (PDCD) in accordance with its operating instructions.
2. Press

. Data is downloaded into your PDCD.

**NOTE**

Depending upon the setting selected in "Set Printer or DEX Options" on page 45, data may be cleared after the download is complete.

3. CONTINUE

## Set Freevend Options

1. Press

, then press until one of the following is displayed:

   **FREE OFF** - Normal vending mode. No items are on freevend. (A closure on the optional keyswitch input causes the machine to go out of service.)

   **- OR -**

   **FREE ON** - All items are on freevend. The credit display shows **NO MONEY REQUIRED** (A closure on the optional keyswitch causes the machine to go out of service.)

   **- OR -**

   **FREE W/KEY** - All items are freevended while there is a closure on the optional keyswitch input. Normal cash sales are supported when the optional keyswitch input is open.

   **- OR -**

   **FREE ONCE** - A closure on the optional keyswitch input causes only the next item to be freevended. Coin mechanism errors are ignored. this state is designed for card or token systems where one item is vended per token. Normal cash sales are also supported.

Manuals available free of charge to our customers at vendingproducts.com

2. Press

until the option you want is displayed.
3. If you selected **FREE W/KEY**, press . The display shows ***ABC**... . This display represents the selections which may get free vends. Enable the selections by pressing the appropriate letter key.
4. CONTINUE

## A

Adjustment, cup mechanism ..... 25
Adjustment, grinder ..... 26
Adjustment, water valve ..... 24
Adjustments and minor maintenance ..... 24
Air, test - Programming procedures ..... 91
Alt vends, view number - Programming procedures ..... 88
Anti-jackpot timer, SureVend™, set up - Programming procedures ..... 72
Automatic brewer rinse time, set - Programming procedures ..... 70
Automatic delivery door, test - Programming procedures ..... 91

## B

Base plate mounting - Figure ..... 13
Base Plate, mounting ..... 13
Beverage discharge nozzles - sanitation procedures ..... 32
Bill acceptor (optional) ..... 10
Bill validator, select - Programming procedures ..... 47
Blended Selections - recipe ..... 67
Bowl rinse time, set - Programming procedures ..... 70
Brewer and brewer funnel - sanitation procedures ..... 32
Brewer assembly w/paper - Figure 1 ..... 33
Brewer assembly w/paper - Figure 2 ..... 34
Brewer assembly, paperless - Figure 1 ..... 33
Brewer assembly, paperless - Figure 2 ..... 34
Brewer cleaning ..... 32
Brewer Cleaning - Figure ..... 32
Brewer configuration - Table ..... 54
Brewer, rinse - Programming procedures ..... 92
Brewer, test - Programming procedures ..... 91
Button, coin return ..... 10

This document is available free of charge to our customers at www.automaticproducts.com

## C

Cabinet assembly, interior - Figure 1 ..... 5
Cabinet assembly, interior - Figure 2 ..... 6
Caffé Latte -recipe ..... 65
Calibration value, SureVend™, last recorded - Programming Procedures ..... 93
Calibration value, SureVend™, view average - Programming procedures ..... 93
Canister filling - Figure ..... 20
Canister installaiton ..... 28
Canister Installation - Figure ..... 28
Canister mapping - Figure ..... 54
Canister mapping - Table ..... 54
Canisters, filling ..... 20
Canisters, ingredient - Sanitation procedures ..... 31
Cappuccino - recipe ..... 64
Card reader, select - Programming procedures ..... 49
Check, noise potential ..... 11

## C (continued)

Check, polarity ....11
Check, voltage ....11
Circuit breakers ....7
Clean hot water tank ....31
Cleaning, brewer ....32
Cleaning, overall ....35
Cleaning, preventive maintenance ....35
Code, configuration, set - Programming procedures ....53
Code, data recall, enter new - Programming procedures ....44
Code, freevend, enter - Programming procedures ....43
Code, supervisor, enter new - Programming procedures ....43
Coffee chutes - sanitation procedures ....32
Coin box lock installation - Figure ....19
Coin box lock, installing ....19
Coin box, view amount in - Programming procedures ....84
Coin mechanism, loading ....20
Coin mechanism. select - Programming procedures ....47
Coin return button ....10
Coins, payout - Programming procedures ....80
Collecting condiment throws - Figure ....59
Collecting dry product gram throws ....59
Collecting hot water throws ....62
Collecting hot water throws - Figure ....62
Condiment chute assembly - sanitation procedures ....32
Configuration code, set - Programming procedures ....53
Connect merchandiser to electrical power pupply ....12
Connect merchandiser to water supply ....12
Connecting everything ....12
Control panel switch functions ....40
Controls and Indicators ....7
Credit added, verify when test vending selections - Programming procedures ....89
Cuno brand water filter installation - Figure ....15
Cup delivery compartment - sanitation procedures ....32
Cup loading - Figure 1 ....21
Cup loading - Figure 2 ....22
Cup mechanism adjustment ....25
Cup mechanism adjustment - Figure ....25
Cup ring cycled, no cup was detected, view times - Programming procedures ....89
Cup ring cycles related to SureVend™, view - Programming procedures ....88
Cup size(s), setting ....22
Cup sizes assigned to selections, view - Programming procedures ....80
Cup sizes, assign to selections - Programming procedures ....56
Cup sizes, set up - Programming procedures ....55
Cup, test drop - Programming procedures ....90
Cups, loading ....21
Custom message, edit - Programming procedures ....77

This document is available free of charge to our customers at www.automaticproducts.com

## D

Data recall code, enter new - Programming procedures ..... 44
Data, download to PDCD - Programming procedures ..... 96
Data, paid sales only, clear - Programming procedures ..... 83
Data, time, view - Programming procedures ..... 86
Data, view three different ways - Programming procedures ..... 82
Day of the week, set - Programming procedures ..... 73
DEX options, set - Programming procedures ..... 46
Diagnostic messages, view - Programming procedures ..... 94
Discount sales, view by time interval - Programming procedures ..... 85
Discount vending, time-of-day, set - Programming procedures ..... 74
Discount, mug, set up - Programming procedures ..... 52
Display language, elect - programming procedures ..... 46
Display, message ..... 10
Display, programming ..... 38
Display, test - Programming procedures ..... 90
Door assembly, exterior -Figure ..... 3
Door assembly, interior - Figure ..... 4
Door, automatic delivery, test - Programming procedures ..... 91
Dry product gram throws, collecting ..... 59
Dry product weight and throw time factory default settings -Table ..... 60

## E

Electrical power supply, connecting merchandiser to ..... 12
European Cappuccino - recipe ..... 66
Everpure brand water filter installation - Figure ..... 16
Exhaust fan filter - sanitation procedures ..... 32

## F

This document is available free of charge to our customers at www.automaticproducts.com

Fill canisters ..... 20
Fill tank ..... 20
Filter paper installation - Figure ..... 18
Filter paper, loading ..... 18
Fluorescent lights, removing POP to service ..... 29
Food contact parts - sanitation procedures ..... 31
Free vend keyswitch ..... 10
Free vending, time-of-day, set - Programming procedures ..... 74
Free vends, view - Programming procedures ..... 85
Freevend code, enter - Programming procedures ..... 43
Freevend message, select - Programming procedures ..... 76
Freevend options, set - Programming procedures ..... 96
Freevend sales, view by time interval - Programming procedures ..... 84
Function keys, programming ..... 39
Fuses ..... 7

## G

Grinder adjustment ....26
Grinder(s), test - Programming procedures ....90

## H

High voltage interlock switch ....10
Home switch usage related to SureVend™, view - Programming procedures ....89
Hot drink, set up - Programming procedures ....57
Hot water tank temperature, view or set - Programming procedures ....68
Hot water tank, cleaning ....31
Hot water throws, collecting ....62
Hydrolife brand water filter installation - Figure ....17

## I

ID number, machine, view - Programming procedures ....88
Individual selection, set price - Programming procedures ....81
Ingredient canisters - Sanitation procedures ....31
Ingredient rinse tray - sanitation procedures ....32
Inhibit vending, time-of-day. set - Programming procedures ....73
Install optional coin box lock ....19
Install water filter cartridge ....15
Installation, Canister ....28

## K

Keypad, service ....10
Keys, function, programming ....39
Keys. other, programming ....39
Keyswitch, free vend ....10

This document is available free of charge to our customers at www.automaticproducts.com

## L

Language, diplay, elect - Programming procedures ....46
Level the merchandiser ....13
Load coin mechanism ....20
Load cups ....21
Load optional filter paper ....18
Location Preparation ....11
Low power settings, set up - Programming procedures ....69
Low temperature dispensing, set up - Programming procedures ....68
Low voltage door switch ....10

## M

Machine ID number, view - Programming procedures ....88
Machine type and configuration code, set - Programming procedures ....53
Machine type configuration - Table ....53
Machine Type, set - Programming procedures ....53
Machine type/configuration setting, view - Programming procedures ....79
Machine, testing ....23

## M (continued)

Main controller PCB display ..... 8
Main controller PCB display - Figure ..... 8
Main power switch ..... 7
Major Parts ..... 3
Mechanical preparation, final ..... 13
Menu assembly set up - Figure ..... 14
Menu assembly, set up ..... 14
Merchandiser, leveling ..... 13
Merchandiser, positioning ..... 12
Message display ..... 10
Message, custom, edit - Programming procedures ..... 77
Message, entering - Programming procedures ..... 78
Message, freevend, select - Programming procedures ..... 76
Message, out-of-service, select - Programming procedures ..... 76
Message, standby, select - Programming procedures ..... 76
Messages, diagnostic, view - Programming procedures ..... 94
Minor maintenance and adjustments ..... 24
Mixing bowls -Sanitation procedures ..... 31
Mixing bowls, rinse - Programming procedures ..... 92
Mode keys, lock/unlock - Programming procedures ..... 44
Mode, supervisor ..... 42
Mode, supervisor, gain access - Programming procedures ..... 43
Mode, talker, set - Programming procedures ..... 46
Mode, winner, set up - Programming procedures ..... 51
Monetary options, select - Programming procedures ..... 49
Monetary panel - figure ..... 9
Month, date, and year, set - Programming procedures ..... 73
Mount the base plate ..... 13
Mug discount, set up - Programming procedures ..... 52
Mug vends, view number - Programming procedures ..... 87

This document is available free of charge to our customers at www.automaticproducts.com

## N

Noise potential check ..... 11
Non food-contact parts - Sanitation procedures ..... 32
Nonresettable sales and vend data, view - Programming procedures ..... 81
Number of alt vends, view - Programming procedures ..... 88
Number of mug vends, view - Programming procedures ..... 87
Number of test vends, view - Programming procedures ..... 87

## O

Other keys, programming ..... 39
Out-of-service message, select - Programming procedures ..... 76
Overall cleaning ..... 35

## P

Paid sales data only, clear - Programming procedures ....83
Paid vends, total, view - Programming procedures ....83
Paid vends, total, view by price line - Programming procedures ....83
Payout keys. lock/unlock - Programming procedures ....44
PDCD, downlaod data to - Programming procedures ....96
Polarity check ....11
Positioning merchandiser ....12
Power control panel, back side ....7
Power control panel, front and back views -Figure ....7
Power panel ....7
Power Requirements ....11
Power settings, low, set up - Programming procedures ....69
Preventive maintenance cleaning ....35
Prices, set - Programming procedures ....81
Prices, set entire machine to one price - Programming procedures ....81
Prices, set price of indiviual selection - Programming procedures ....81
Printer baud rate, select - Programming procedures ....45
Printer or DEX options, set - Programming procedures ....45
Procedures - Sanitation ....31
Procedures, programming ....39, 43
Programming ....38
Programming - Getting around ....38
Programming procedures ....39
Programming, display ....38
Programming, function keys ....39
Programming, other keys ....39
Programming, selection switch panel ....38
Programming, service keypad ....38

This document is available free of charge to our customers at www.automaticproducts.com

## R

Reader, card, select - Programming procedures ....49
Recipes ....64
Recipes - Blended Selections ....67
Recipes - Caffé Latte ....65
Recipes - Cappucino ....64
Recipes - European Cappuccino ....66
Recommended cleaning and sanitation intervals - Table ....36
Record of cleaning - Table ....37
Removing POP to service flourescent lights, starters and ballasts - Figure ....29
Resettable data, clear all - Programming procedures ....83
Rinse time, automatic brewer, set - Programming procedures ....70
Rinse time, bowl, set - Programming procedures ....70

## S

Sales and vend data, nonresettable, view - Programming procedures ..... 81
Sales data, paid only, clear - Programming procedures ..... 83
Sales, discount, view by time interval - Programming procedures ..... 85
Sales, feevend, view by time interval - Programming procedures ..... 84
Sales, total paid, view - Programming procedures ..... 82
Sales, total paid, view by price line - Programming procedures ..... 82
Sales, unpaid, total, view - Programming procedures ..... 87
Sanitaiton procedures - Ingredient canisters ..... 31
Sanitation ..... 30
Sanitation - how do I sanitize? ..... 30
Sanitation Basics ..... 30
Sanitation kit, a good place to start ..... 30
Sanitation procedures ..... 31
Sanitation procedures - beverage discharge nozzles ..... 32
Sanitation procedures - brewer and brewer funnel ..... 32
Sanitation procedures - coffee chutes ..... 32
Sanitation procedures - condiment chute assembly ..... 32
Sanitation procedures - cup delivery compartment ..... 32
Sanitation procedures - exhaust fan filter ..... 32
Sanitation procedures - food contact parts ..... 31
Sanitation procedures - ingredient rinse tray ..... 32
Sanitation procedures - Introduction ..... 30
Sanitation procedures - Mixing bowls ..... 31
Sanitation procedures - non food-contact parts ..... 32
Sanitation procedures - waste pail ..... 32
Sanitation procedures - Whipper lids and impellers ..... 32
Select bill validator - Programming procedures ..... 47
Select card reader - Programming procedures ..... 49
Select monetary options - Programming procedures ..... 49
Selection switch panel ..... 10
Selection switch panel, programming ..... 38
Selection, individual, set price - Programming procedures ..... 81
Selections, assign cup sizes to - Programming procedures ..... 56
Selections, disable in merchandiser - Programming procedures ..... 55
Selections, test vend and verify credit added - Programming procedures ..... 89
Selections, view cup size(s) assigned to - Programming procedures ..... 80
Sensors, test - Programming procedures ..... 92
Service keypad ..... 10
Service keypad - Figure ..... 10
Service keypad - programming ..... 38
Set cup size(s) ..... 22
Set up mug discount - Programming procedures ..... 52
Set-up, initial ..... 11
Software version, view - Programming procedures ..... 72
Specifications ..... 1
Specifications common to all machines ..... 1

This document is available free of charge to our customers at www.automaticproducts.com

## S (continued)

Specifications unique to 115V machines ....2
Standby message, select - Programming procedures ....76
Supervisor code, enter new - Programming procedures ....43
Supervisor Mode ....42
Supervisor mode, gain access - Programming procedures ....43
SureVend™ ....41
SureVend™ anti-jackpot timer, set up - Programming procedures ....72
SureVend™ Average Calibration Value, view - Programming procedures ....93
SureVend™ last recorded calibration value, view - Programming procedures ....93
SureVend™, mandatory - Programming procedures ....71
SureVend™, optional - Programming procedures ....71
SureVend™, optional or mandatory - Programming procedures ....71
SureVend™, related cup ring cycles, view - Programming procedures ....88
SureVend™, related home switch usage, view - Programming procedures ....89
SureVend™, turn on/off - Programming procedures ....71
Switch functions, control panel ....40
Switch panel, selection ....10
Switch, high voltage interlock ....10
Switch, low voltage door ....10
Switch, main power ....7
Switches, test - Programming procedures ....92

## T

Talker mode, set - Programming procedures ....46
Tank errors, clear - Programming procedures ....93
Tank, fill - Programming procedures ....93
Tank, filling ....20
Tank, hot water, cleaning ....31
Temperature, hot water tank, view or set - Programming procedures ....68
Temperature, low, set up dispensing - Programming procedures ....68
Temperature, water tank, view - Programming procedures ....79
Test machine ....23
Test vends, view number - Programming procedures ....87
Throws, dry product gram, collecting ....59
Throws, hot water, collecting ....62
Time data, view - Programming procedures ....86
Time interval, edit - Programming procedures ....74
Time of day, set - Programming procedures ....72
Time-of-day discount vending, set - Programming procedures ....74
Time-of-day free vending, set - Programming procedures ....74
Time-of-day inhibit vending, set - Programming procedures ....73
Times no cup was detected after cup ring cycled, view - Programming procedures ....89
Total paid sales, view - Programming procedures ....82
Total paid sales, view by price line - Programming procedures ....82
Total paid vends by price line, view - Programming procedures ....83
Total paid vends, view - Programming procedures ....83

This document is available free of charge to our customers at www.automaticproducts.com

## T (continued)

Total unpaid sales, view - Programming procedures ..... 87
Total unpaid vends, view - Programming procedures ..... 87
Tube routing Diagram ..... 35

## U

Unpaid sales, total, view - Programming procedures ..... 87
Unpaid vends, total, view - Programming procedures ..... 87

## V

Validator, view amount in - Programming procedures ..... 84
Vends, alt, view number - Programming procedures ..... 88
Vends, free, view - Programming procedures ..... 85
Vends, mug, view number - Programming procedures ..... 87
Vends, test, view number - Programming procedures ..... 87
Vends, unpaid, total, view - Programming procedures ..... 87
View free vends - Programming procedures ..... 85
Voltage check ..... 11

## W

Waste pail - sanitation procedures ..... 32
Water filter cartridge, installing ..... 15
Water Requirements ..... 11
Water supply line ..... 12
Water supply, connecting merchandiser to ..... 12
Water tank temperature, view - Programming procedures ..... 79
Water throw default times and volumes - Table ..... 63
Water valve adjustment ..... 24
Water valve adjustment - Figure ..... 24
Whipper lids and impellers - sanitation procedures ..... 32
Whipper(s), test - Programming procedures ..... 90
Winner mode, set up - Programming procedures ..... 51
Winners, view - Programming procedures ..... 85

## Y

Your sanitation kit - A good place to start ..... 30

This document is available free of charge to our customers at www.automaticproducts.com

# Limited Express Warranty

Automatic Products (AP) warrants these automatic merchandisers (the *"Unit"),* manufactured by it, to be free under normal use and service from defects in material or workmanship for a period of two (2) years from the date of delivery of this Unit to the original purchaser who purchased the Unit either directly from AP or from an authorized AP dealer or distributor ("AP *Dealer/Distributor"*). This warranty extends only to the original purchaser of the Unit, but only if purchased either directly from AP or from an authorized AP Dealer/Distributor ("*Original Purchaser*"), and is limited to the repair or replacement, at AP's sole option, of any parts of the Unit that are returned to AP or to the authorized AP Dealer/Distributor from whom the Unit was originally purchased, with all transportation charges prepaid by Original Purchaser, and which, on AP's examination, such returned part or parts shall conclusively appear to have been defective.

This warranty does not extend to:

1. Any Unit, or part thereof, that was subjected to misuse, neglect, or accident by anyone other than AP after its delivery to the Original Purchaser.
2. Any Unit, or part thereof, that was modified, altered, incorrectly wired or improperly installed by anyone other than AP or used in violation of the instructions provided by AP.
3. Any Unit, or part thereof, which has been repaired or altered by anyone other than AP or an authorized AP Dealer/Distributor.
4. Any Unit, or part thereof, which has had the serial number removed, defaced or otherwise altered.
5. Any plastic or glass windows, lamps, fluorescent tubes and water connect parts.
6. Any Unit used outdoors.
7. Any accessories used with the Unit that were manufactured by some person or entity other than AP.
8. Any Unit repaired within the warranty period with parts other than genuine AP built or endorsed parts.

This document is available free of charge from

AP DISCLAIMS ALL OTHER WARRANTIES OF ANY KIND AS TO THE UNIT AND ALL WARRANTIES OF ANY KINDS AS TO ANY ACCESSORIES. THIS DISCLAIMER OF WARRANTIES INCLUDES (1) ANY EXPRESS WARRANTIES OTHER THAN THE LIMITED WARRANTY PROVIDED ABOVE AS TO THE UNIT AND (2) ALL IMPLIED WARRANTIES OF MERCHANTIBILITY AND FITNESS FOR A PARTICULAR PURPOSE AS TO THE UNIT AND ANY ACCESSORIES. UNDER NO CIRCUMSTANCES SHALL AP BE RESPONSIBLE FOR ANY INCIDENTAL, CONSEQUENTIAL OR SPECIAL DAMAGES, LOSSES, OR EXPENSES (INCLUDING BUT NOT LIMITED TO LOST PROFITS, LOST SALES, INJURY TO PERSON OR PROPERTY) ARISING FROM OR IN CONNECTION WITH THE USE OF, OR THE INABILITY TO USE, THE UNIT FOR ANY PURPOSE WHATSOEVER REGARDLESS OF THE LEGAL THEORY (CONTRACT, TORT OR OTHER). IN NO EVENT WILL AP BE OBLIGATED TO PAY DAMAGES FOR ANY AMOUNT EXCEEDING THE PRICE PAID FOR THE UNIT.

No Representative of AP or any other person is authorized to assume for AP, or agree to on behalf of AP, any other liability or warranty in connection with the sale of this Unit.

AP reserves the right to make any changes or improvements in its products without notice and without obligation, and without being required to make corresponding changes or improvements in Units theretofore manufactured or sold.