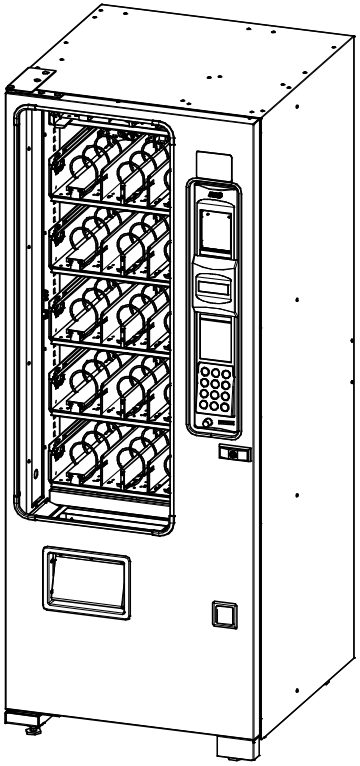

Where Innovation Is Nothing New

AUTOMATED MERCHANDISING SYSTEMS INC.

Epoch SERIES

MODEL 28 and 39 GEM

GLASS FRONT MERCHANDISER ILLUSTRATED PARTS MANUAL

L0125, REV. E

AUTOMATED MERCHANDISING SYSTEMS INC
255 WEST BURR BLVD.
KEARNEYSVILLE, WV 25430
304-725-6921 - Fax 304-725-6983
info@amsvendors.com
www.amsvendors.com

INTERNATIONAL A.M.S. S DE RL DE CV
KM. 9 CARR. AL CASTILLO NO. 8200
MPIO. DE EL SALTO, JAL. MEXICO 45680
5233-3-6-88-07-17 - Fax 5233-3-6-88-13-14
www.amsint.com.mx
servicio@amsint.com.mx

AMS Glass Front Merchandiser
Model 28 and 39 GEM
Illustrated Parts Manual

Table of Contents

SECTION	PAGE
INTRODUCTION	
Table of Contents	3
General Introduction	4
Manual Organization	4
Merchandiser Identification	5
Patent Disclosure	6
Publication Notice	6
CABINET DOOR	8
HOPPER	12
CABINET	16
BASE PLATE	20
CONTROL BAY DOOR	22
RIGHT RAIL MOUNT	26
LEFT RAIL MOUNT/ LIGHTING	30
TRAYS AND PARTS	32
ELECTRICAL HARNESSES	48
HELIXES	60

GENERAL INTRODUCTION

The purpose of this manual is to give our customers a way of identifying major service parts for repair and replacement. The illustrations and parts list in this manual are for identification only. Some optional parts are also shown.

Illustrations of these major parts are keyed with our part numbers. The illustrations help identify the general design, position and orientation of these parts. The note section may also give important information.

Please refer to the section on merchandiser identification on the following pages. Without the model style and serial number it may be difficult to identify the required part.

Parts should be ordered from your distributor.

It is our intent to assist our customers with up-to-date documentation. However, this manual may not show all parts, variations or changes. Some parts may be shown out of scale. This manual is itself subject to change without notice. If any errors are found, please notify AMS so the correction can be included in later revisions. Engineering data and third party information are generally not included. The graphical data, group assembly data, parts, part assembly, parts breakout information and tabular data conveyed by this manual is proprietary and belongs to AMS, and holders without prior consent of or without knowledge of and by AMS must surrender this data immediately.

All measurements are in inches except where specified as Metric.

MANUAL ORGANIZATION

This manual is divided into general sections. Each section is further divided into the various subsections or subassemblies. These lead off with one or more illustrations showing the parts and each part is identified with a number. Note that some part numbers are for assemblies fabricated as a unit at AMS and are replaceable only as a unit. Also, other part numbers identify optional parts which may or may not have been contracted for and factory installed by AMS.

The part number in the illustration is listed with the description or title for that part. In some instances there may be multiple parts to choose from. The correct service or repair part for the style of merchandiser must be selected.
There is a note section where additional information may be found.

This manual contains additional and new information for a vendor as currently manufactured. Older revisions of this manual should be kept with older vendors.

MERCHANDISER IDENTIFICATION

When requesting service, replacement parts or technical assistance, please use the **Model Number** and the **Serial Number with Date Code**, found on the Serial Plate (Refer to Figure 1) affixed to the merchandiser. The plate is usually located inside the window. The information contained on this plate is necessary to determine what parts, kits, or maintenance apply to your vendor.

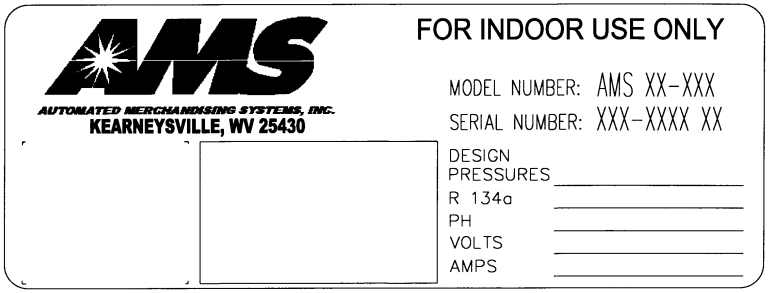

72–002 Serial Plate

Figure 1. Example of Typical Serial Plate

Example of Model Number Breakdown

AMS G8 – 6 24

Manufacturer | Cabinet Width | No. of Trays | No. of Selections

Example: AMSG8-6-24 means this vendor is an Automated Merchandising Systems merchandiser, **28**" wide, with six (**6**) trays making available twenty four (**24**) positions for different products.

Example of Serial Number and Date Code Breakdown

1 - 0902 - 0275

Built | Year | Month | Sequence

Example: 1-0902-0275 is translated as U.S. built (**1)**, manufactured in **2009**, month of **February**, and was the **275th** manufactured that year.

Note: Manufactured in Mexico, Built = (2)

PATENT DISCLOSURE

This merchandiser and/or certain of its components are covered by one or more of the following U.S. and international patents;

U.S. PATENTS: 6,041,962; 6,145,699; 6,202,888; 6,384,402; 6,520,373; 6,708,079; 6,794,634; 7,191,915; 7,246,719; 7,343,220 B2; 7,742,837; 7,446,302; 8,003,931.

CANADIAN PATENT 2,329,314.

MEXICO PATENT 230714.

PUBLICATION NOTICE

L0125, Revision E, ECN 3113, 01/24/14

It is our intent to assist our customers with up-to-date documentation: however, this manual may not contain all updates and is subject to revision without notice. Please contact our Service Department with your requests or comments.

THIS PAGE INTENTIONALLY LEFT BLANK

CABINET DOOR ILLUSTRATION

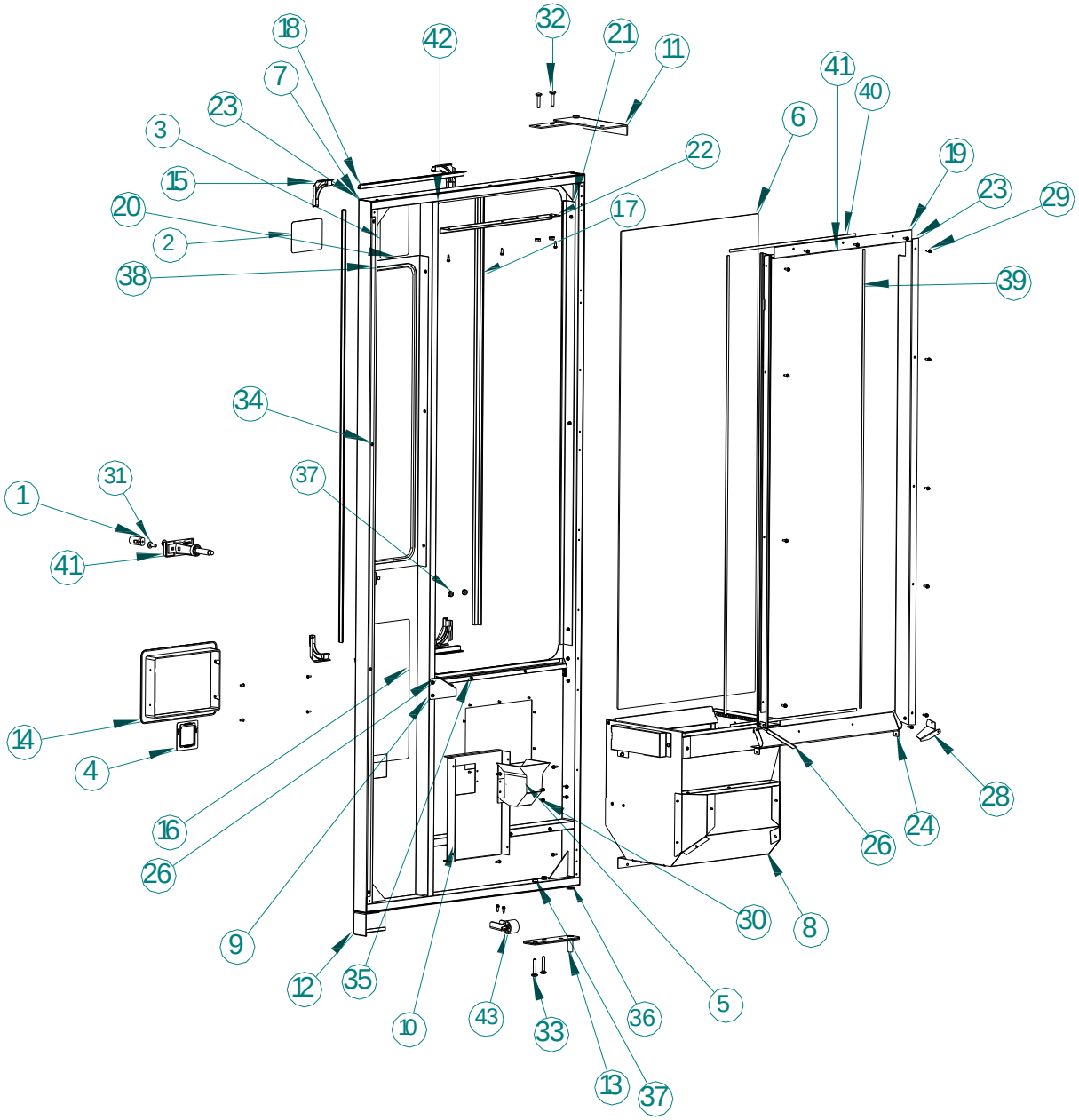

CABINET DOOR PARTS LIST			
ITEM	PART NO.	PART DESCRIPTION	NOTES
	25259	CABINET DOOR 28” SLIM GEM (COMPLETE)	COLOR: BLACK
	25259-01	CABINET DOOR 28” SLIM GEM (COMPLETE)	COLOR: RED
	25259-02	CABINET DOOR 28” SLIM GEM (COMPLETE)	COLOR: BLUE
	25259-03	CABINET DOOR 28” SLIM GEM (COMPLETE)	COLOR: GRAY
	25263	CABINET DOOR 39” WIDE GEM (COMPLETE)	COLOR: BLACK
	25263-01	CABINET DOOR 39” WIDE GEM (COMPLETE)	COLOR: RED
	25263-02	CABINET DOOR 39” WIDE GEM (COMPLETE)	COLOR: BLUE
	25263-03	CABINET DOOR 39” WIDE GEM (COMPLETE)	COLOR: GRAY
1	20131	LOCK, T-HANDLE CYLINDER	
2	21318-01	DECAL, WARNING, NO TIP OR ROCK ENGLISH/SPANISH/FRENCH	
3	21325	DECAL, WARNING TRAY EXTENSION ENGLISH/SPANISH/FRENCH	
4	23372-01	TRIM, PLASTIC COIN CUP, GRAY	
5	23373-01	ASSEMBLY, PLASTIC COIN CUP, GRAY	
6	23865	GLASS, SINGLE PANE, 28” SLIM VENDOR	MODEL 28” SLIM
	24164	GLASS, SINGLE PANE, 39” GEM	MODEL 39” WIDE
7	23871	ASSEMBLY, DOOR FRAME, WELDMENT, 28” SLIM	MODEL 28” SLIM
	24163	ASSEMBLY, DOOR FRAME, WELDMENT, 39” GEM	MODEL 39” WIDE
8	23873	ASSEMBLY, HOPPER, 28” SLIM VENDOR	MODEL 28” SLIM
	24170	ASSEMBLY, HOPPER, 39” GEM	MODEL 39” WIDE
9	23875	BRACE, DOOR KICKER	
10	23881	PANEL, COIN CUP MOUNTING	
11	23946	ASSEMBLY, TOP HINGE	
12	24005	FALSE LEG	
13	24047	ASSEMBLY, DOOR HINGE, BOTTOM	
14	24063-01	TRIM, VEND EYELET, SLIM GEM (GRAY)	MODEL 28” SLIM

	21624-01	TRIM, VEND EYELET (GRAY)	MODEL 39” WIDE
15	24099	CORNER, WINDOW TRIM, PLASTIC	
16	24489	DECAL, PROGRAM INSTRUCTIONS, S3	
17	24761-09	TRIM, EXTRUDED EDGE, VER. 2 (41.89”)	2 PER DOOR
18	24761-10	TRIM, EXTRUDED EDGE, VER. 2 (13.54”)	MODEL 28” SLIM
	24761-15	TRIM, EXTRUDED EDGE, VER. 2 (24.12”)	MODEL 39” WIDE
19	24799	RETAINER, GLASS, TOP, 28” SLIM, EPOCH	MODEL 28” SLIM
	24874	RETAINER, GLASS, TOP, 39” WIDE, EPOCH	MODEL 39” WIDE
20	24822	STIFFENER, ESCUTCHEON, GEM, EPOCH	
21	24880	BRACKET, VERTICAL WINDOW STIFFENER, GEM, EPOCH	
22	24881	BRACKET, TOP WINDOW STIFFENER, 28” SLIM, EPOCH	MODEL 28” SLIM
	24882	BRACKET, TOP WINDOW STIFFENER, 39” WIDE, EPOCH	MODEL 39” WIDE
23	25279	RETAINER, GLASS, RIGHT SIDE, GEM, EPOCH	
24	25280	RETAINER, GLASS, BOTTOM, 28” SLIM GEM, EPOCH	MODEL 28” SLIM
	25285	RETAINER, GLASS, BOTTOM, 39” WIDE GEM, EPOCH	MODEL 39” WIDE
25	25281	BRACKET, BOTTOM WINDOW STIFFENER, 28” SLIM GEM, EPOCH	MODEL 28” SLIM
	25286	BRACKET, BOTTOM WINDOW STIFFENER, 39” WIDE GEM, EPOCH	MODEL 39” WIDE
26	25282	ASSY., VERTICAL KICKER, RIGHT, GEM, EPOCH	
27	25283	KICKER, RIGHT SIDE, GEM, EPOCH	
28	25284	KICKER, LEFT SIDE, GEM, EPOCH	
29	3000	SCREW, SHEET METAL TEK – 8 – 18	
30	3001-03	SCREW, SHEET METAL, TYPE B, #8-18	
31	3004-06	CARRAIGE BOLT, ¼ - 20 X ¾	
32	3004-10	CARRAIGE BOLT, ¼ - 20, LENGTH 1 ¼”	
33	3004-12	CARRAIGE BOLT, ¼ - 20, LENGTH 1 ½”	
34	3009-02	RIVET, STEEL, 1/8”, BLACK	
35	3009-04	RIVET, STEEL, BLACK, 1/8 DIA X ¼ GRIP	
36	3023-15	WASHER, FLAT NYLON (1/2”)	
37	3153-11	NUT, HEX WITH LOCK WASHER, ¼ - 20	

38	3684	EDGE TRIM, SELF-LOCKING, 66.51” LG	
39	3726	TAPE, BLACK POLYETHYLENE, .06 X ¼ X 44.5	
40	3726	TAPE, BLACK POLYETHYLENE, .06 X ¼ X 16.5	
41	3818	ASSEMBLY, T-HANDLE, GEM, EPOCH	
42	25276	DOOR SKIN, 28” SLIM GEM, EPOCH	COLOR: BLACK
	25276-01	DOOR SKIN, 28” SLIM GEM, EPOCH	COLOR: RED
	25276-02	DOOR SKIN, 28” SLIM GEM, EPOCH	COLOR: BLUE
	25276-03	DOOR SKIN, 28” SLIM GEM, EPOCH	COLOR: GRAY
	25277	DOOR SKIN, 39” WIDE GEM, EPOCH	COLOR: BLACK
	25277-01	DOOR SKIN, 39” WIDE GEM, EPOCH	COLOR: RED
	25277-02	DOOR SKIN, 39” WIDE GEM, EPOCH	COLOR: BLUE
	25277-03	DOOR SKIN, 39” WIDE GEM, EPOCH	COLOR: GRAY
43	23718	ASSEMBLY, ROLLER GEM	NOT SHOWN MODEL 39” WIDE ONLY

General Note: Door skin decal (if equipped) is not shown in parts list.

MODEL 28 HOPPER PARTS ILLUSTRATION

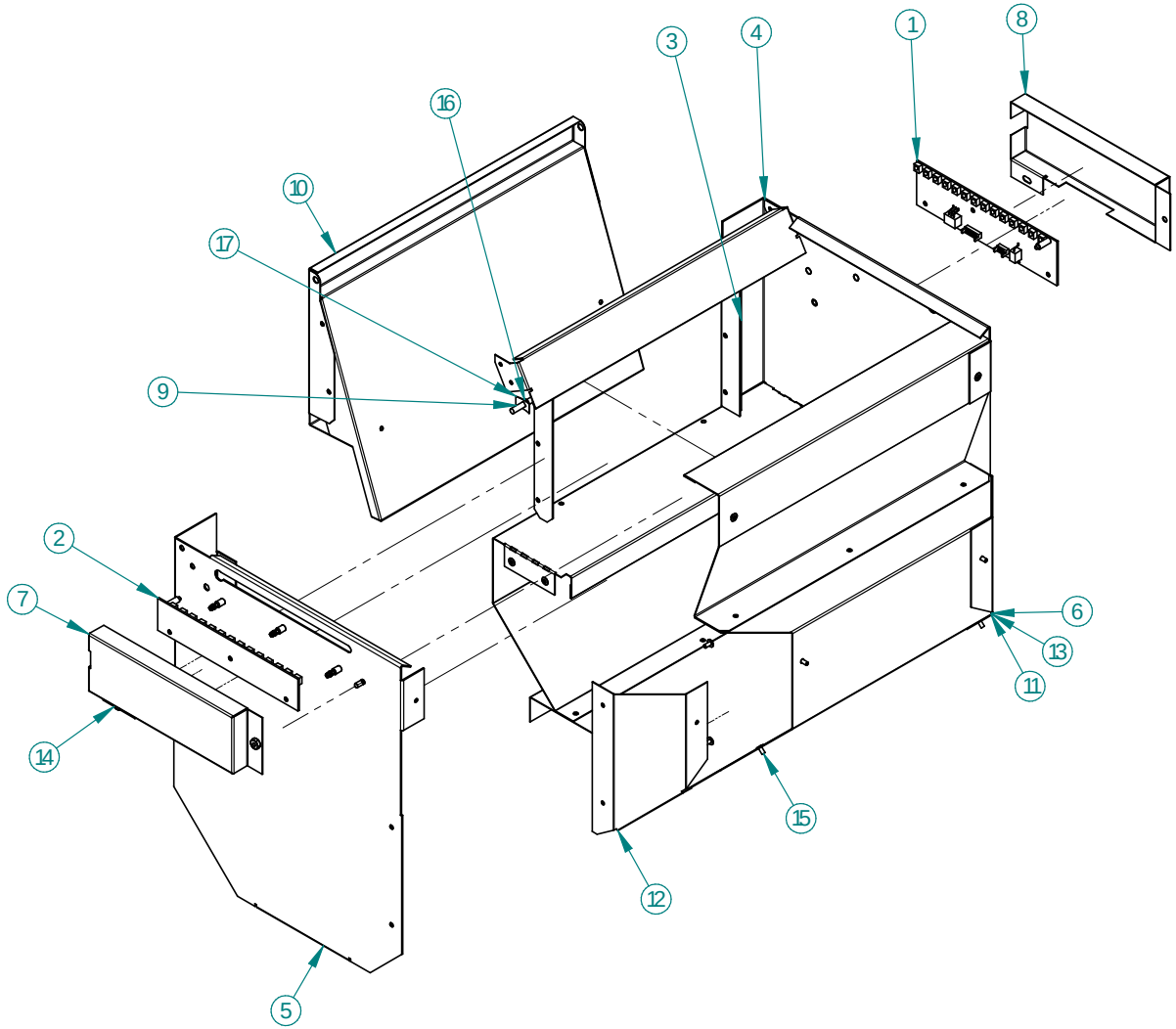

MODEL 28 HOPPER PARTS LIST			
ITEM	PART NO.	PART DESCRIPTION	NOTES
	23873	ASSEMBLY, HOPPER, 28” SLIM	
1	24342	SENSOR BOARD, PRIMARY	
2	24343	SENSOR BOARD, SECONDARY	
3	23486	HOPPER FRAME	
4	23874	DEFLECTOR, HOPPER	
5	23877	ASSEMBLY, HOPPER RIGHT SIDE	
6	23877-01	ASSEMBLY, HOPPER LEFT SIDE	
7	23878	BRACKET, SENSOR COVER, RIGHT	
8	23878-01	BRACKET, SENSOR COVER, LEFT	
9	23913	VEND DOOR SHAFT	
10	23932	ASSEMBLY, HOPPER DOOR	
11	23933	ASSEMBLY, HOPPER BODY	
12	23956	HOPPER, BACK SIDE, LEFT	
13	23956-01	HOPPER, BACK SIDE, RIGHT	
14	3006-08	#8-32 HEX NUT	
15	3009-02	RIVET, STEEL, 1/8” BLACK	
16	3015	BEARING, NYLINER	
17	3113	TINNERMAN FASTENER, 3/16	
18	24461	PAD, BOTTLE HOPPER, 28” GEM	OPTIONAL, NOT SHOWN
19	24462	COVER, BOTTLE HOPPER PAD, 28” GEM	OPTIONAL, NOT SHOWN

MODEL 39 HOPPER PARTS ILLUSTRATION

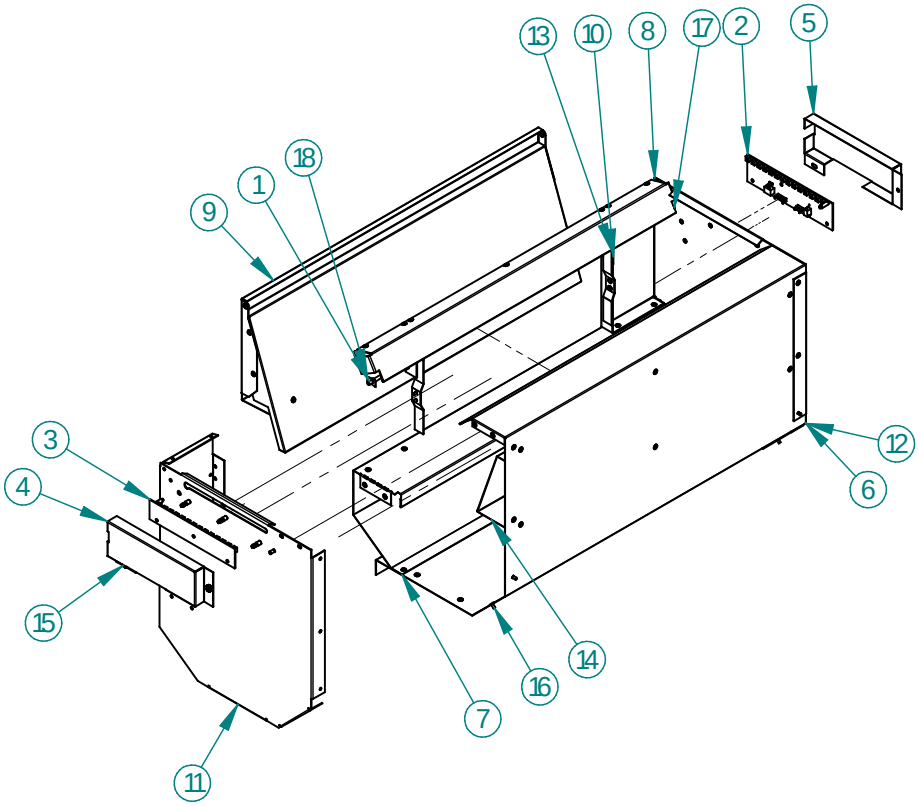

MODEL 39 HOPPER **PARTS LIST**			
ITEM	PART NO.	PART DESCRIPTION	NOTES
	24170	ASSEMBLY, HOPPER, 39” WIDE	
1	20108	VEND DOOR SHAFT	
2	24342	SENSOR BOARD, PRIMARY	
3	24343	SENSOR BOARD, SECONDARY	
4	23878	BRACKET, SENSOR COVER, RIGHT	
5	23878-01	BRACKET, SENSOR COVER, LEFT	
6	24173	PANEL, HOPPER, BOTTOM	
7	24174	PANEL, HOPPER, FRONT	
8	24175	DEFLECTOR, HOPPER	
9	24176	ASSEMBLY, HOPPER DOOR	
10	24181	FRAME, HOPPER	
11	24182	ASSEMBLY, HOPPER RIGHT SIDE	
12	24183	ASSEMBLY, HOPPER LEFT SIDE	
13	24188	RETAINER, HOPPER TRIM	
14	24226	INSERT, HOPPER	
15	3006-08	#8-32 HEX NUT	
16	3009-02	RIVET, STEEL, 1/8” BLACK	
17	3015	BEARING, NYLINER	
18	3113	TINNERMAN FASTENER, 3/16	
19	24491	PAD, BOTTLE HOPPER, 39” GEM	OPTIONAL, NOT SHOWN
20	24492	COVER, BOTTLE HOPPER PAD, 39” GEM	OPTIONAL, NOT SHOWN

CABINET PARTS ILLUSTRATION

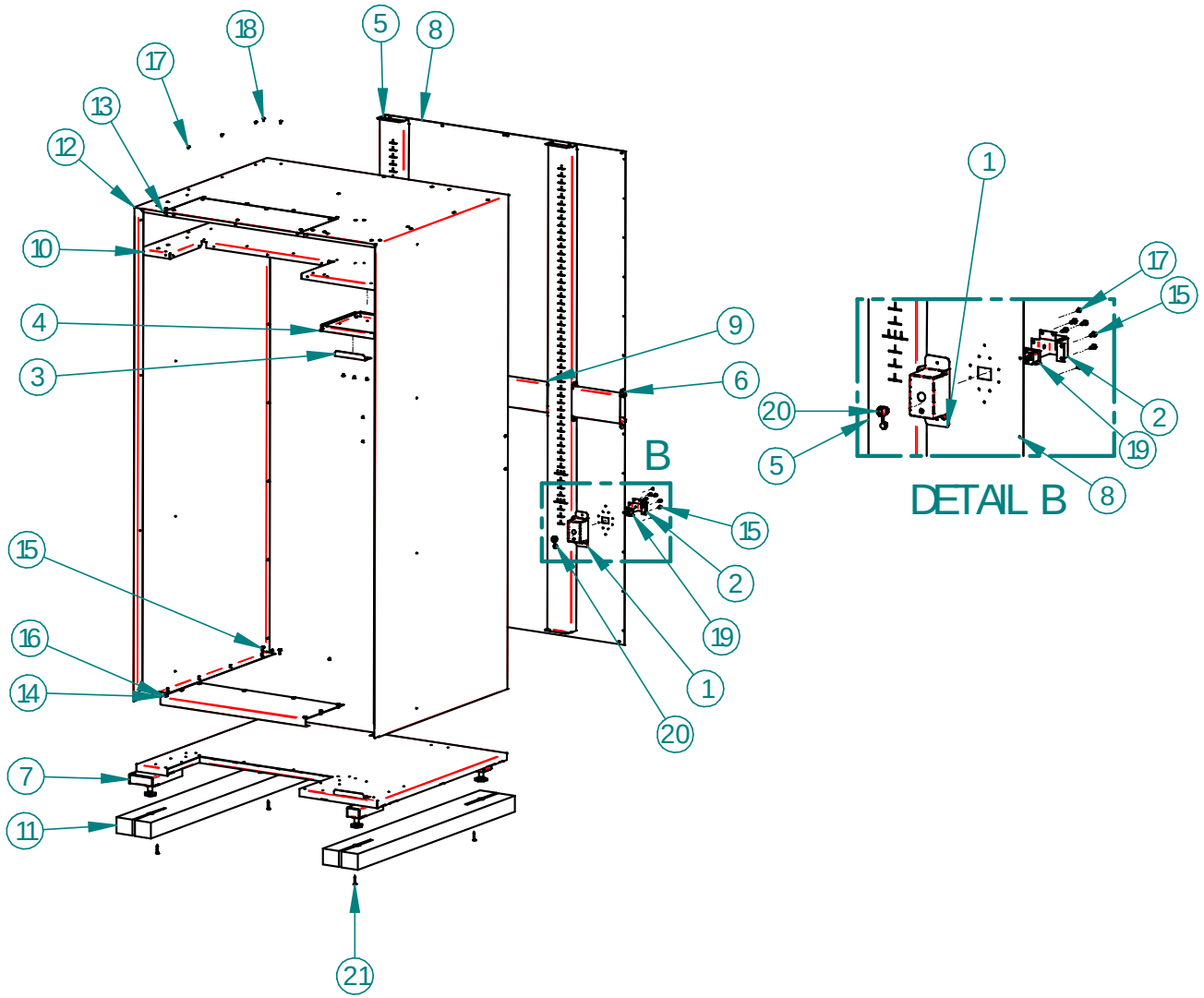

CABINET PARTS LIST			
ITEM	PART NO.	PART DESCRIPTION	NOTES
	23925	ASSEMBLY, CABINET, 28” SLIM GEM	
	24143	ASSEMBLY, CABINET, 39” WIDE GEM	
1	20321	COVER, IEC INLET	
2	20608	COVER, POWER CORD	
3	23701	BASE, COIN BOX RESTRICTION	
4	23944	SPACER, RAIL MOUNT, GEM	
5	23971	RAIL MOUNT, BACK, GEM	
6	24045	SUPPORT, SMALL, RAIL MOUNT BACK, GEM	
7	23853	ASSEMBLY, BASE	MODEL 28 SLIM
	24136		MODEL 39 WIDE
8	23928	WRAPPER BACK	MODEL 28 SLIM
	24147		MODEL 39 WIDE
9	23456	SUPPORT, BACK RAIL MOUNT	MODEL 28 SLIM
	24148		MODEL 39 WIDE
10	23920	DOUBLER, TOP	MODEL 28 SLIM
	24157		MODEL 39 WIDE
11	24037	PALLET, SHIPPING	MODEL 28 SLIM
	24158	SHIPPING BOARD	MODEL 39 WIDE
12	23926	WRAPPER, CABINET	MODEL 28 SLIM
	24205		MODEL 39 WIDE
13	24233	ASSEMBLY, INSERT, TOP, 39” GEM	MODEL 39 WIDE ONLY
14	24237	PANEL, BOTTOM, INSERT, 39” GEM	MODEL 39 WIDE ONLY
15	3000	SCREW, SHEET METAL TEK – 8-18	
16	3001-03	SCREW, SHEET METAL, TYPE B, #8-18	
17	3009-02	RIVET, STEEL, 1/8”, BLACK	
18	3009-04	RIVET, POP, STEEL, 1/8, BLACK	
19	3057	INLET, PANEL MOUNT, IEC	
20	3080	STRAIN RELIEF, BUTTON LOCK	
21	3241-10	SCREW, #6 DRYWALL	
22	3270	DECAL – MADE IN THE USA	NOT SHOWN

CABINET PARTS LIST			
ITEM	PART NO.	PART DESCRIPTION	NOTES
23	24159	KICKER, BACK PLATE, 39” GEM	MODEL 39 ONLY (NOT SHOWN, REMOVE FOR GUM & MINT TRAY)
24	23960	KICKER, BACK PLATE, 28” SLIM	MODEL 28 ONLY (NOT SHOWN)
25	24021	BRACKET, BALLAST RESTRAINT	CANADIAN MODEL 28 ONLY (NOT SHOWN)
26	24053	ASSEMBLY, STABILITY WEIGHT WELDMENT	CANADIAN MODEL 28 ONLY (NOT SHOWN)

THIS PAGE INTENTIONALLY LEFT BLANK

BASE PLATE PARTS ILLUSTRATION

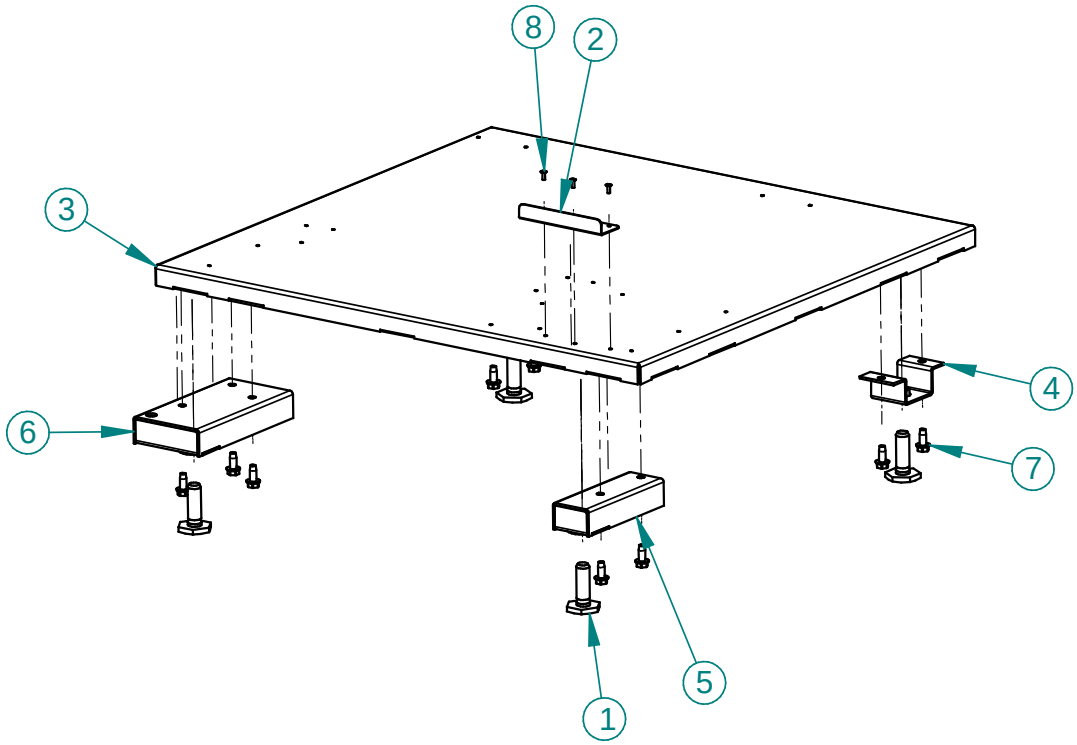

BASE PLATE PARTS LIST			
ITEM	PART NO.	PART DESCRIPTION	NOTES
	23853	BASE PLATE, 28” SLIM GEM	
	24136	BASE PLATE, 39” WIDE GEM	
1	20121	LEG, LEVELING	
2	23701	BASE, COIN BOX, RESTRICTION	
3	23855	ASSEMBLY, BASE WELDMENT	MODEL 28 SLIM
	24137		MODEL 39 WIDE (NOT SHOWN)
4	23857	ASSEMBLY, LEG WELDMENT	
5	24009	ASSEMBLY, LEG, EXTENDED FRONT	
6	24010	ASSEMBLY, DOOR HINGE W/FOOT	
7	3007-06	SCREW, 5/16 – 18, TYPE F	
8	3009-04	RIVET, POP, STEEL 1/8	

DOOR, CONTROL BAY ILLUSTRATION

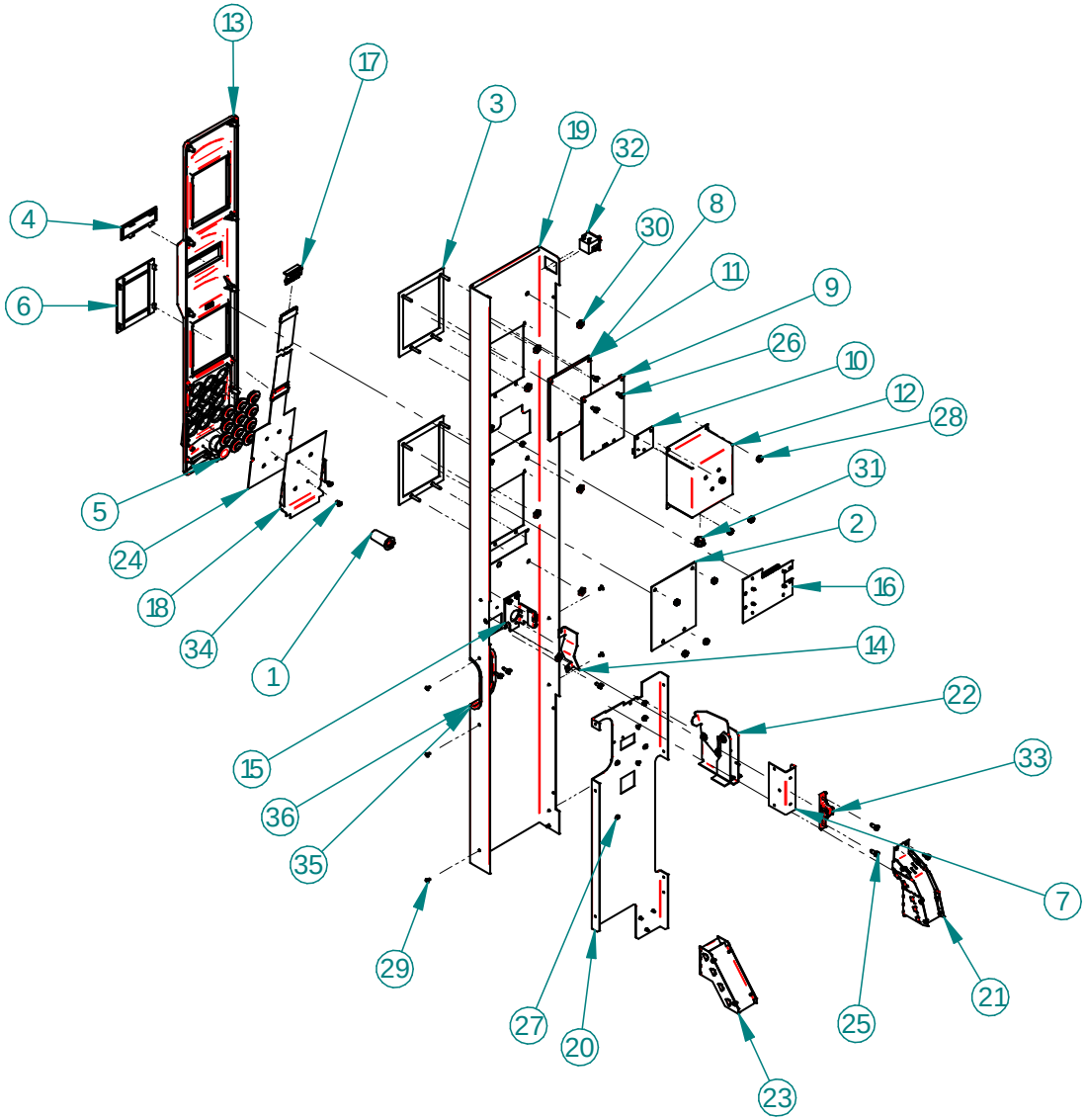

DOOR, COIN BAY PARTS LIST			
ITEM	PART NO.	PART DESCRIPTION	NOTE
	24813	ASSEMBLY, DOOR, CONTROL BAY	
1	20081-01	SCAVENGER BUTTON	COLOR: BLACK
2	20181	DBV COVER PLATE	
3	20344	DBV MOUNTING BEZEL ASSEMBLY	
4	22175	ESCUTCHEON LENS	
5	22177	PLASTIC BUTTON	
6	22184-01	DBV COVER PANEL	COLOR: GRAY
7	24030	BRACKET, LATCH MOUNTING, GEM	
8	24322	INSERT, PLACE HOLDER, POS DISPLAY	
9	24323	DIFFUSER, PLACE HOLDER, POS DISPLAY	
10	24329	BOARD, LED, POS DISPLAY	
11	24330	CARD, AMS, POS DISPLAY	
12	24339	ASSEMBLY, LIGHT BOX W/ STANDOFFS	
13	24616	ESCUTCHEON, PLASTIC, EPOCH	
	24623	ESCUTCHEON/KEYPAD ASSY	INCLUDES ESCUTCHEON, LIGHTED KEYPAD & BUTTONS AND DISPLAY LENS
14	24641	SCAVENGER STOP BRACKET, EPOCH	
15	24642	BRACKET, PUSH BUTTON ALIGNMENT, EPOCH	
16	24739	ASSEMBLY, DISPLAY EPOCH	
17	24746	LED DRIVER, KEYPAD	
18	24782	MEMBRANE SWITCH MOUNTING PLATE, 4.76 X 3.57	
19	24814	DOOR PANEL, CONTROL BAY, GEM, EPOCH	
20	24816	PANEL, CHANGER MOUNTING, GEM, EPOCH	
21	24817	ASSY, COIN CHUTE, GEM, EPOCH	
22	24819	ASSEMBLY, SCAVENGER SYSTEM, GEM, EPOCH	
23	24832	ASSEMBLY, COIN CHUTE, M. PANEL TO BULKHEAD, GEM, EPOCH	
24	25688	ASSEMBLY, LIGHTED KEYPAD	
25	3000	SCREW, SHEET METAL TEK – 8-18	
26	3001-03	SCREW, SHEET METAL, TYPE B, #8-18	
27	3002-04	SCREW, MACHINE, TYPE F, #8-32	
28	3006-08	#8-32 HEX NUT	

29	3009-02	RIVET, STEEL, 1/8”, BLACK	
30	3011	SELF THREADING NUT, ¼” STUD	
31	3029-02	BUSHING	
32	3036	SWITCH, PANEL MOUNT ROCKER	
33	3226-01	KEEPER, SLAM ACTION LATCH	
34	3289-02	SCREW, #8 PAN HEAD	
35	3693	GROMMET EDGING, 4.87” LG	
36	3693	GROMMET EDGING, 6.5” LG	

THIS PAGE INTENTIONALLY LEFT BLANK

RIGHT RAIL MOUNT PARTS ILLUSTRATION

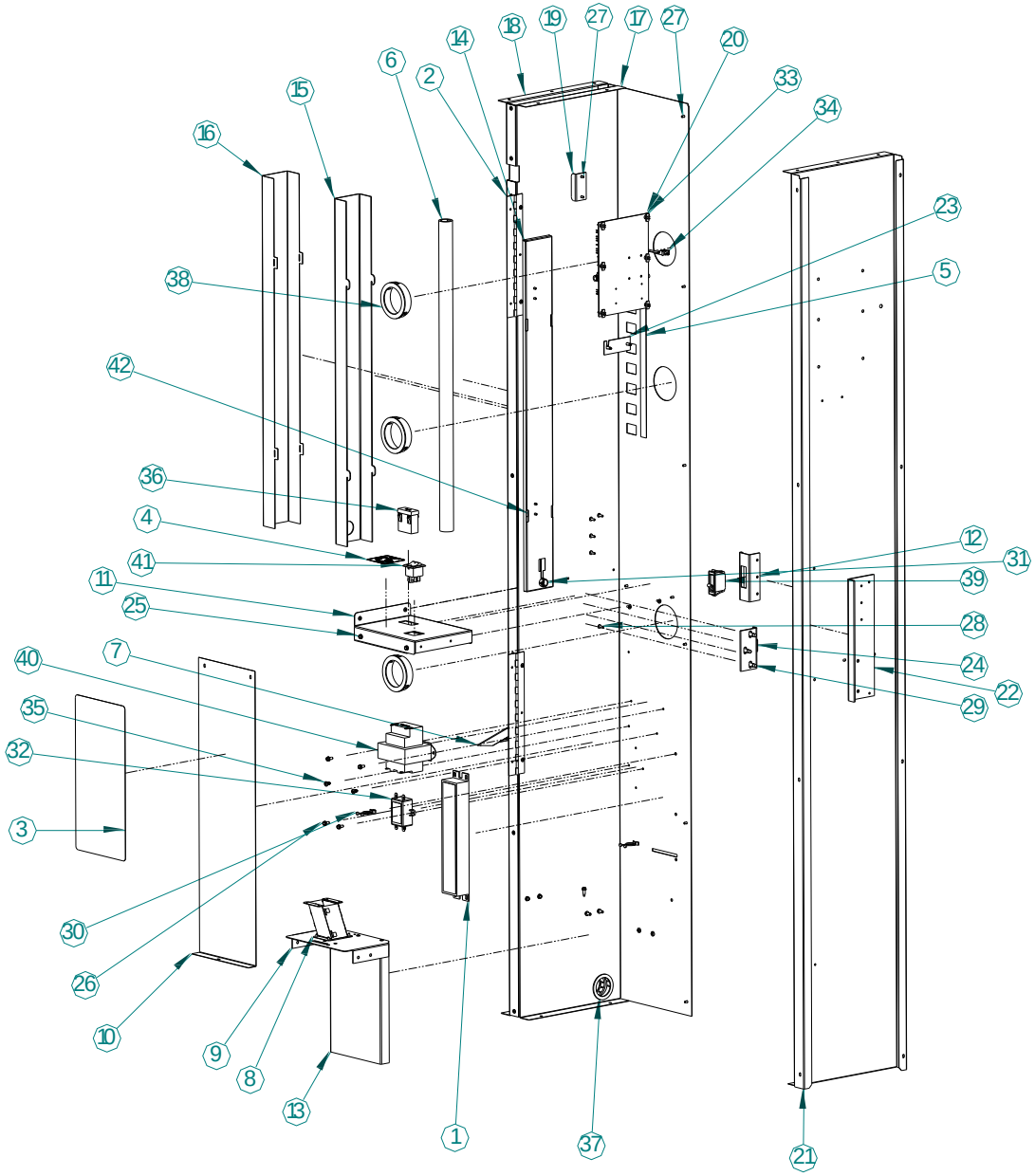

RIGHT RAIL MOUNT PARTS LIST

ITEM	PART NO.	PART DESCRIPTION	NOTES
	25260	ASSEMBLY, RAIL MOUNT, RIGHT, 28” SLIM GEM, EPOCH	MODEL 28” SLIM GEM
	25264	ASSEMBLY, RAIL MOUNT, RIGHT, 39” WIDE GEM, EPOCH	MODEL 39” WIDE GEM
1	20730	BALLAST, 115V	OPTIONAL, CHECK UNIT VOLTAGE
	24025	BALLAST, 220V	
2	20874	HINGE, CONTINUOUS	
3	21324	DECAL, WARNING, ENGLISH/SPANISH	
4	21509	DECAL, 24V FUSE, VER. 2	
5	22041	DECAL, TRAY POSITION, 1-7	
6	23522	LAMP. LED. 24”	OPTIONAL, 39” WIDE ONLY
7	23887	KICKER, RAIL MOUNT	
8	23897	ASSY., COIN BOX CHUTE, GEM	
9	23899	BULKHEAD, COIN BOX, GEM	
10	23908	CONTROL BAY, WIRE COVER	
11	23940	SUPPORT, RAIL MOUNT, GEM	
12	23957	BRACKET, LOCK HOLDER, FEMALE	
13	23964	PLATE, COIN BOX RESTRICTOR, GEM	
14	24253	BOX, RIGHT RAIL	MODEL 39” WIDE ONLY
15	24255	COVER, 24” LAMP, 39” GEM	OPTIONAL, 39” WIDE ONLY
16	24267	INSERT, LIGHT BOX COVER, GEM	OPTIONAL, 39” WIDE ONLY
17	23939	INSERT, RAIL MOUNT, 28” GEM	MODEL 28” SLIM GEM
	24295	INSERT, RAIL MOUNT, 39” GEM	MODEL 39” WIDE GEM
18	23888	PANEL, RAIL MOUNT RIGHT, 28” GEM	MODEL 28” SLIM GEM
	24296	PANEL, RAIL MOUNT RIGHT, 39” GEM	MODEL 39” WIDE GEM
19	24430	BRACKET, COIN DOOR STOP	
20	24750	CONTROL BOARD, LIGHTED KEYPAD, USD	
21	24854	RAIL MOUNT, VERTICAL SUPPORT, GEM, EPOCH	

22	24855	LATCH REINFORCEMENT, GEM, EPOCH	
23	24897	STRAP, STRAIN RELIEF, KEYPAD, EPOCH	
24	24966	ASSEMBLY, LOCK NUT, GEM	
25	3000	SCREW, SHEET METAL TEK – 8-18	
26	3001-03	SCREW, SHEET METAL, TYPE B, #8-18	
27	3009-02	RIVET, STEEL, BLACK 1/8 DIA X 1/8 GRIP	
28	3009-04	RIVET, STEEL, BLACK 1/8 DIA X 1/4 GRIP	
29	3018-06	SCREW, SHEET METAL TEK – ¼	
30	3020	WIRE TIE, STANDOFF	
31	3029-02	BUSHING, OPEN/CLOSED	
32	3030	RFI FILTER, 115V	CHECK UNIT VOLTAGE
	3191	RFI FILTER, 240V	
33	3037-01	PC BOARD SUPPORT	
34	3081	WIRE TIE, 0.250 PANEL MOUNT	
35	3084-03	SCREW, SEMS, 8-32	
36	3133-30	ASSEMBLY, FUSE HOLDER AND FUSES	
37	3205-24	GROMIT, 1-3/4”	
38	3205-34	GROMIT	
39	3226-02	CATCH, SLAM ACTION LATCH	
40	3257	TRANSFORMER, CLASS II, 120V/24V	CHECK UNIT VOLTAGE
	3258	TRANSFORMER, CLASS II, 240V/24V	
41	3284	SWITCH, ROCKER, ON/OFF	
42	3689-10	CLIP, 1” DIA, BLACK PVC	

THIS PAGE INTENTIONALLY LEFT BLANK

LEFT RAIL MOUNT ILLUSTRATION

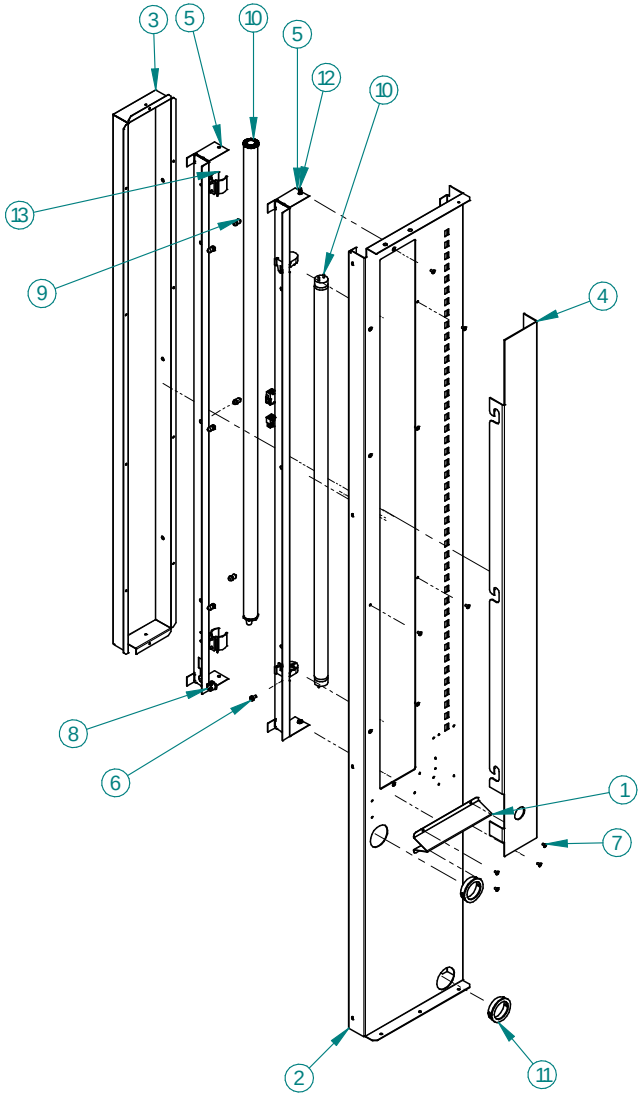

LEFT RAIL MOUNT PARTS LIST			
ITEM	PART NO.	PART DESCRIPTION	NOTE
	23891	ASSEMBLY, LEFT RAIL MOUNT, GEM	
1	23446	PRODUCT KICKER, LEFT	
2	23892	RAIL MOUNT, FORWARD, LEFT	
3	23893	BOX, 35” LAMP MOUNTING, GEM	
4	23894	COVER, 35” LAMP, GEM	
5	23896	BRACKET, LAMP HOLDER, GEM	FLUORESCENT OPTION
	24089	BRACKET, LED LAMP HOLDER, GEM	LED OPTION
6	3001-03	SCREW, SHEET METAL, TYPE B, #8-18	
7	3009-02	RIVET, STEEL, BLACK, 1/8 DIA X 1/8 GRIP	
8	3029-02	BUSHING, OPEN/CLOSED	LED OPTION
9	3038	RIVET, NYLON, TRIM	
10	3202	FLUORESCENT LAMP, 25W, F025/841	FLUORESCENT OPTION
	23521	LAMP, LED, 42” VERTICAL	LED OPTION
11	3205-24	GROMIT, 1-3/4”	
12	3342-04	SCREW, SHEET METAL TEK – 8-18	
13	3689-10	CLIP, 1” DIA, BLACK PVC	LED OPTION
14	23901	HARNESS, SINGLE LAMP, 115V	NOT SHOWN, FLUORESCENT OPTION, CHECK UNIT VOLTAGE
	24023	HARNESS, SINGLE LAMP, 220V	

MODEL 28 STANDARD TRAY ILLUSTRATION

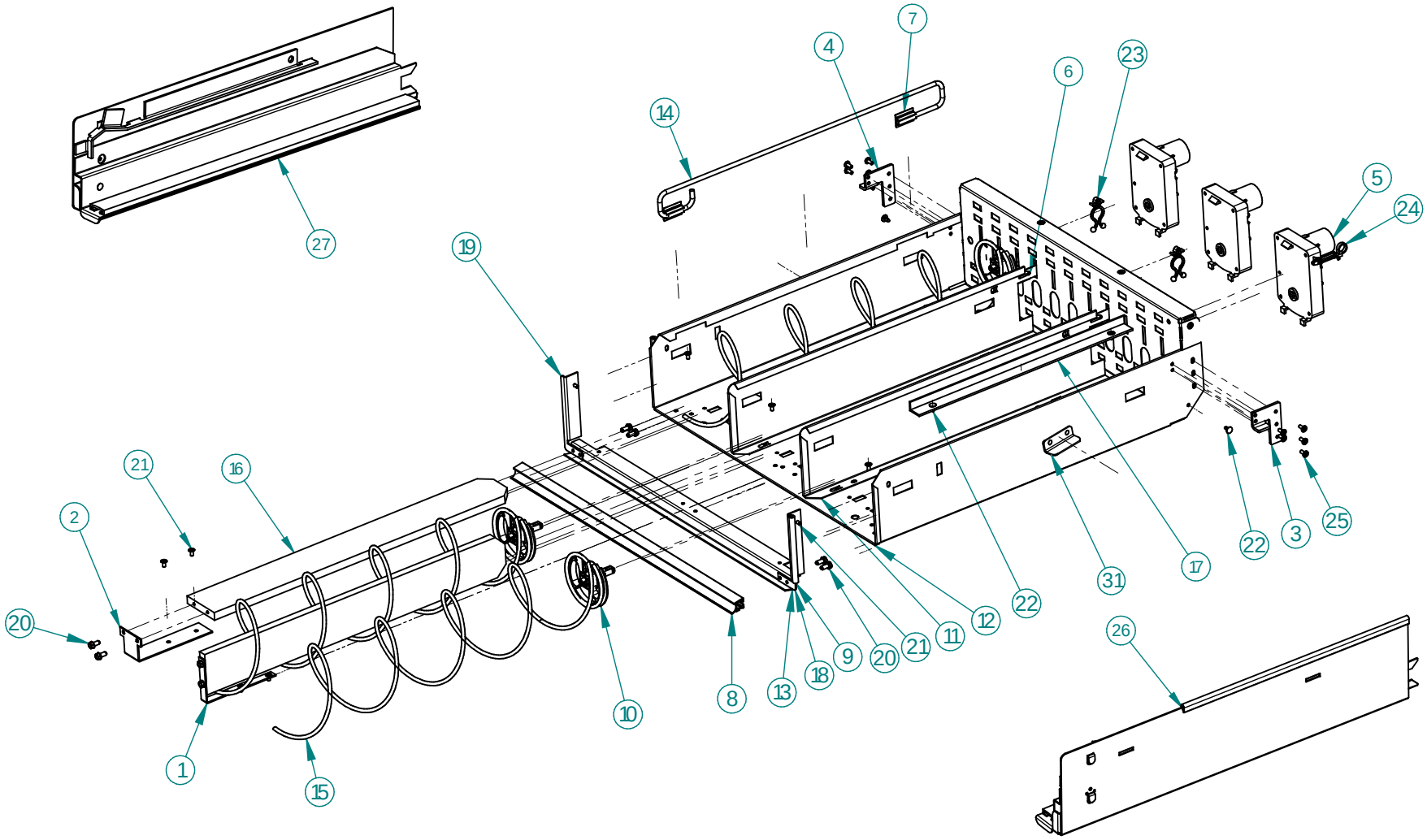

MODEL 28 STANDARD TRAY PARTS LIST			
ITEM	PART NO.	PART DESCRIPTION	NOTE
	23965	ASSEMBLY, STANDARD TRAY, 28” SLIM	
1	20421	HELIX SPLITTER BRACKET	OPTIONAL ITEM
2	20527	BRACKET, CUP RAIL, SMALL HELIX	OPTIONAL ITEM
3	20073	TRAY STOP	
4	20073-01	TRAY STOP, LH	
5	23007	MOTOR W/HOME CIRCUIT, CCW	OPTIONAL ITEM
	23007-01	MOTOR W/HOME CIRCUIT, CW	OPTIONAL ITEM
6	20133	TRAY DIVIDER SPRING	
7	20220	EXTRUSION, CANDY PUSHER	OPTIONAL ITEM
8	20465-06	EXTRUSION, PRICE MARKER	
9	20796-01	EDGE TRIM, TRAY CORNER	
10	20966	HELIX ADAPTER	
11	23447	TRAY DIVIDER STANDARD	INCLUDES DIVIDER WITH 20133 SPRING, SELECT TYPE, NUMBERS TO FORM COLUMNS
	24335	TRAY DIVIDER HIGH	
	24337	TRAY DIVIDER EXTRA HIGH	
12	23448	TRAY BODY, REDUCED DEPTH	
13	23492	TRAY DOUBLER	
14	23502	BAR, CANDY PUSHER	
15	--------	HELIX, SMALL CCW, PAINTED	SEE HELIX DESCRIPTION SECTION FOR OPTIONS
16	23553	HELIX SPLITTER	OPTIONAL ITEM
17	23969	HELIX ALIGNMENT DEVICE	OPTIONAL ITEM
18	24050	TRAY CORNER, NARROW	
19	24050-01	TRAY CORNER, NARROW, LH	
20	3001-03	SCREW, SHEET METAL, TYPE B, #8-18	
21	3009-02	RIVET, STEEL, 1/8”, BLACK	
22	3019	CANOE CLIP	
23	3020	WIRE TIE, STANDOFF	
24	3042-01	WIRE TIE, PANEL MOUNT	
25	3295-03	RIVET, STEEL, 1/8”, PLATED	
26	23545	RIGHT TRAY RAIL	
27	23546	LEFT TRAY RAIL	
28	20909	LABEL SHEET, LOCATION	NOT SHOWN

MODEL 28 STANDARD TRAY PARTS LIST			
ITEM	PART NO.	PART DESCRIPTION	NOTE
29	20614	LABEL SHEET, PRICE	NOT SHOWN
30	20528	BRACKET, CUP RAIL LARGE HELIX	NOT SHOWN REF ITEM 2 FROM ILLUSTRATION
31	23471	TRAY STOP, INTERMEDIATE, SLIM	
32	24046-01	KIT, MINI-DISPENSER	OPTIONAL, NOT SHOWN

THIS PAGE INTENTIONALLY LEFT BLANK

MODEL 28 SCROLLING PRICE TRAY ILLUSTRATION

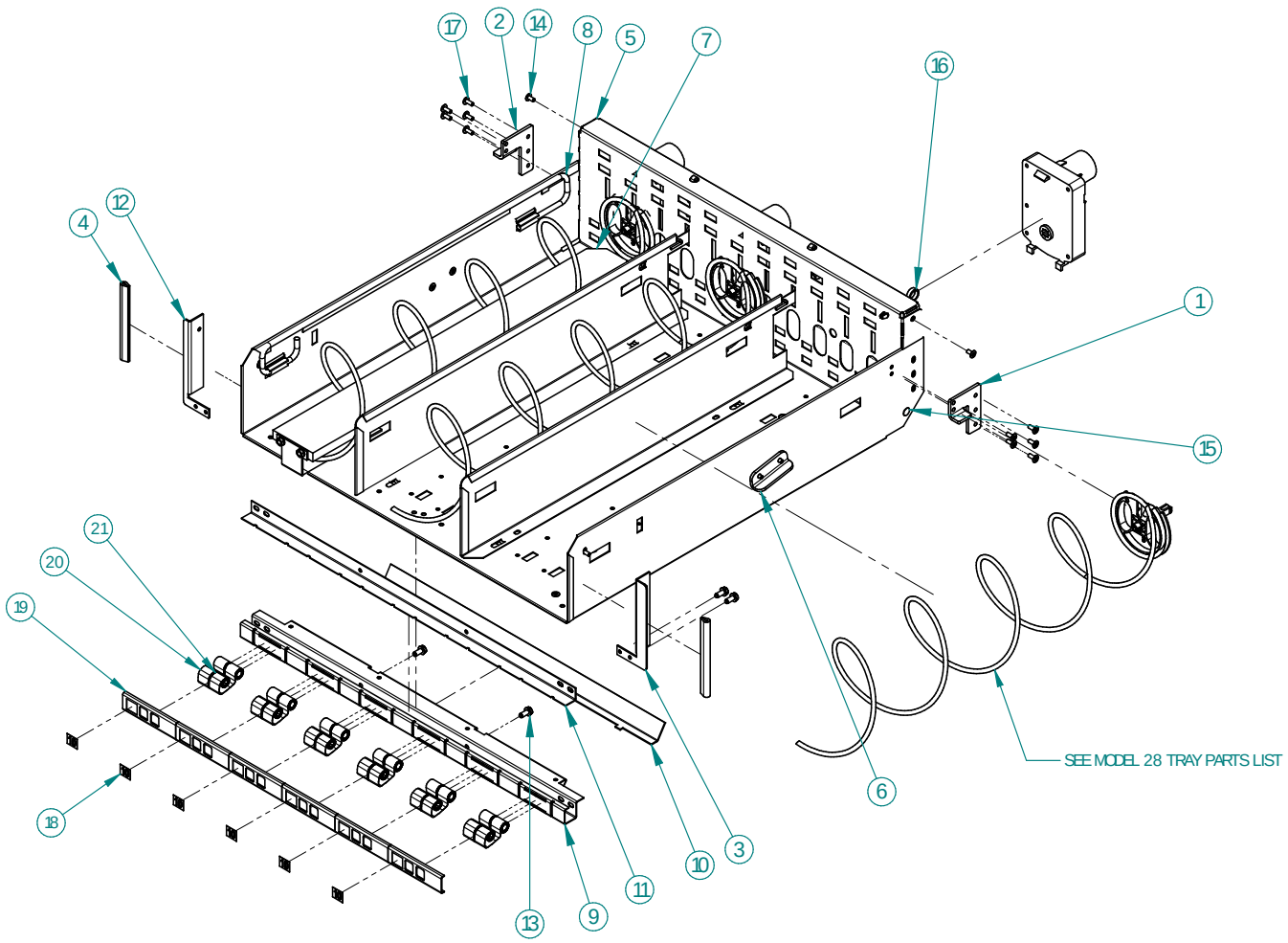

MODEL 28 SCROLLING PRICE TRAY PARTS LIST			
ITEM	PART NO.	PART DESCRIPTION	NOTE
	24020	ASSEMBLY, TRAY, SCROLLING PRICE, 28” SLIM	
1	20073	TRAY STOP	
2	20073-01	TRAY STOP, LH	
3	20545	TRAY CORNER	
4	20796-01	EDGE TRIM, TRAY CORNER	
5	23448	TRAY BODY, REDUCED DEPTH	
6	23471	TRAY STOP, INTERMEDIATE, SLIM	
7	23967	KIT, CUP RAIL	OPTIONAL ITEM
8	23968	KIT, CANDY PUSHER	OPTIONAL ITEM
9	24017	STIFFENER, TRAY, SCROLLING PRICES	
10	24018	COVER, TRAY STIFFENER	
11	24019	GUIDE, SCROLLING PRICES	
12	24050-01	TRAY CORNER, LH	24050-01
13	3001-03	SCREW	
14	3009-02	RIVET	
15	3019	CANOE CLIP	
16	3042-01	WIRE TIE	
17	3295-03	RIVET	
18	23292	LOCATION LABEL	
19	23791	COVER, 10 SELECT	QUANTITIES OPTIONAL
	23791-01	COVER, 10 SELECT BLANK	
20	23321	SCROLL, PRICE .00-.95	QUANTITIES OPTIONAL
21	23322	SCROLL, PRICE 1-20	

Note: Reference model 28 standard tray for additional parts.

MODEL 39 (SNACK/CANDY/FOOD) STANDARD TRAY ILLUSTRATION

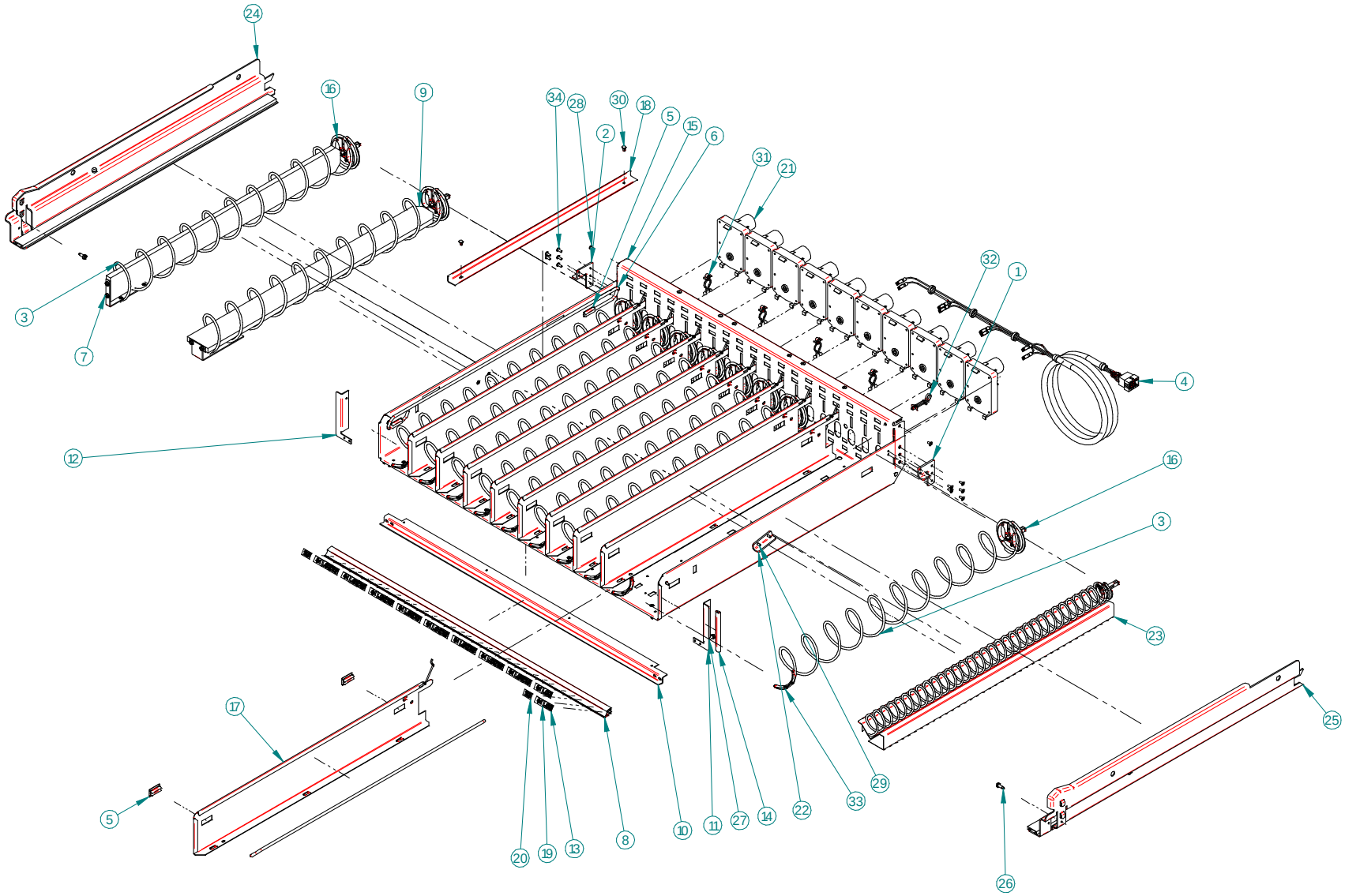

MODEL 39 (SNACK/CANDY/FOOD) STANDARD TRAY PARTS LIST			
ITEM NO	PART NO.	PART DESCRIPTION	NOTE
	24038	ASSEMBLY, (SNACK/CANDY/FOOD) STANDARD TRAY, 39”	
1	20073	TRAY STOP	
2	20073-01	TRAY STOP, LH	
3	-----	HELIX	1 PER COLUMN. SEE MODEL 39 HELIX FOR OPTIONS
4	20147	HARNESS, TRAY 10 COLUMN	
5	20220	EXTRUSION, CANDY PUSHER	OPTIONAL, 2 PER 20221 & DIVIDER WITH CUTOUTS
6	20221	BAR, CANDY PUSHER	OPTIONAL, 1 PER DIVIDER WITH CUTOUTS
7	20450	KIT, HELIX SPLITTER	OPTIONAL, 1 PER SELECTION
8	20465-01	EXTRUSION, PRICE MARKER, REDUCED HEIGHT	
9	20535	KIT, CUP RAIL, SMALL HELIX	OPTIONAL, 1 PER SELECTION
	20536	KIT, CUP RAIL, 4” HELIX	
10	20544	TRAY DOUBLER, VER. 2 (39”)	
11	20545	TRAY CORNER, VER. 2 (RH)	
12	20545-01	TRAY CORNER, VER. 2 (LH)	
13	20614	LABEL SHEET, REDUCED HEIGHT, PRICE	
14	20796-01	EDGE TRIM, TRAY CORNER	RIGHT HAND CORNER ONLY
15	20955	TRAY BODY, REDUCED DEPTH (39”)	
16	20966	HELIX ADAPTOR, WITHOUT HUB	
17	21138	ASSEMBLY, TRAY DIVIDER	INCLUDES DIVIDER WITH 20133 SPRING, SELECT TYPE, NUMBERS TO FORM COLUMNS
	21139	ASSEMBLY, TRAY DIVIDER, HIGH	
	23664	ASSEMBLY, TRAY DIVIDER, EXTRA HIGH	
18	22192	HELIX ALIGNMENT DEVICE, PVC	
19	22908	LABEL SHEET, REDUCED HEIGHT, PRICE W/$	
20	22909	LABEL SHEET, REDUCED HEIGHT, LOCATION, WHITE	
21	23007	MOTOR, WITH HOME CIRCUIT, CCW	OPTIONAL
	23007-01	MOTOR, WITH HOME CIRCUIT, CW	
22	23471	TRAY STOP, INTERMEDIATE	
23	24046	KIT, MINI-DISPENSER	OPTIONAL, 1 PER SELECTION
24	24487	ASSEMBLY, TRAY RAIL, 39” GEM (LH)	

MODEL 39 (SNACK/CANDY/FOOD) STANDARD TRAY PARTS LIST			
ITEM NO	PART NO.	PART DESCRIPTION	NOTE
25	24487-01	ASSEMBLY, TRAY RAIL, 39” GEM (RH)	
26	3000	SCREW, SHEET METAL TEK – 8-18	
27	3001-03	SCREW, SHEET METAL, TYPE B, #8-18	SAFETY SCREWS FOR RAILS
28	3009-02	RIVET, STEEL, BLACK 1/8 DIA X 1/8 GRIP	
29	3009-04	RIVET, STEEL, BLACK 1/8 DIA X ¼ GRIP	
30	3019	CANOE CLIP	2 PER HELIX ALIGNMENT DEVICE
31	3020	WIRE TIE, STAND OFF	
32	3042-01	WIRE TIE, PANEL MOUNT	
33	3111	HELIX EJECTOR	
34	3295-03	RIVET, STEEL, 1/8”, PLATED	

THIS PAGE INTENTIONALLY LEFT BLANK

MODEL 39 SCROLLING PRICE TRAY ILLUSTRATION

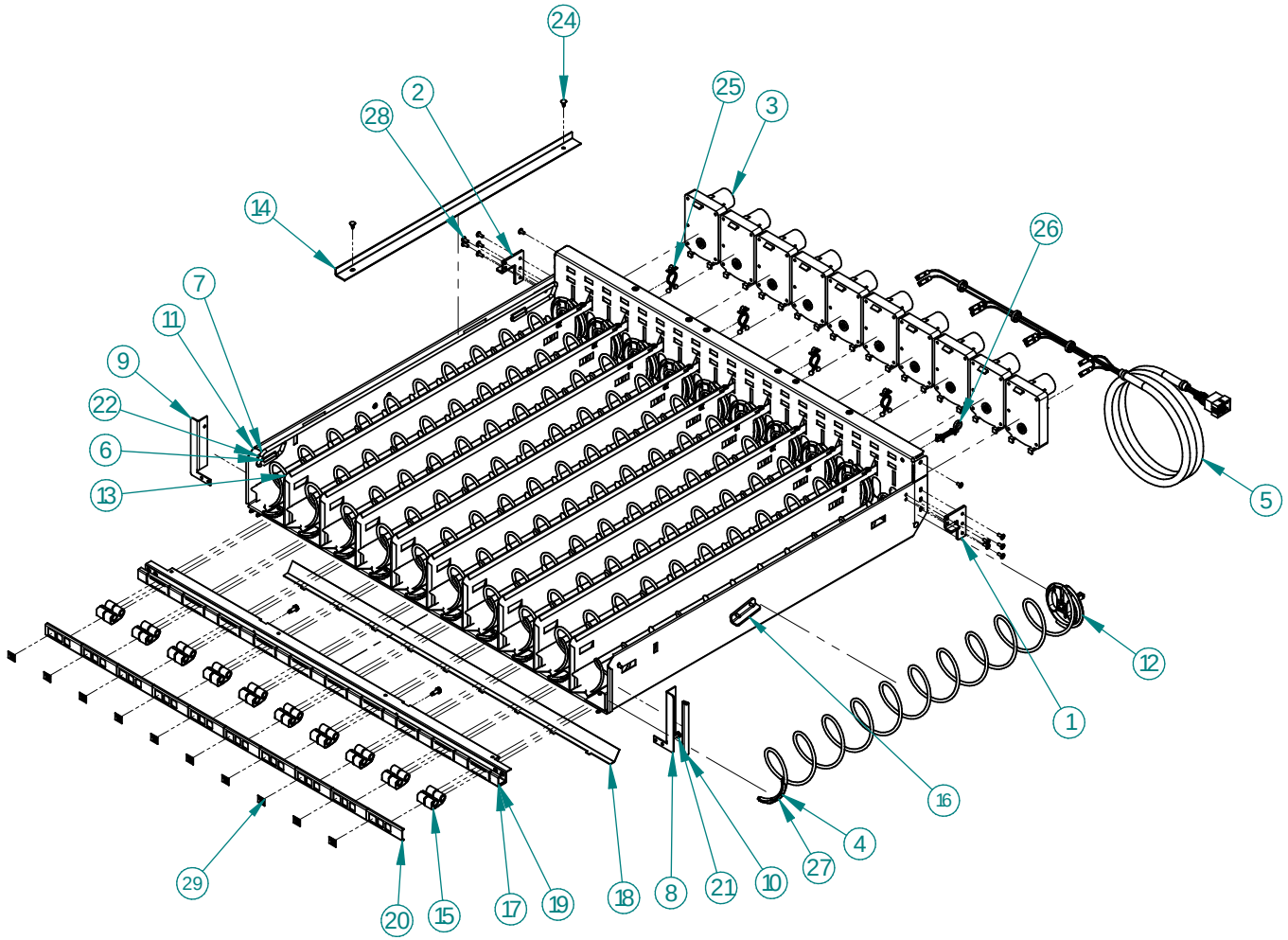

MODEL 39 SCROLLING PRICE TRAY PARTS LIST			
ITEM	PART NO.	PART DESCRIPTION	NOTE
	23833	ASSEMBLY, (SNACK/CANDY/FOOD) TRAY, SCROLLING PRICE, 39”	
1	20073	TRAY STOP	
2	20073-01	TRAY STOP LEFT	
3	23007	MOTOR, COUNTER CLOCKWISE	
	23007-01	MOTOR, CLOCKWISE	OPTIONAL
4	----------	HELIX	SEE HELIX TABLE
5	20147	HARNESS, TRAY 10 COLUMN	
6	20220	EXTRUSION, CANDY PUSHER	OPTIONAL
7	20021	BAR, CANDY PUSHER	OPTIONAL
8	20545	TRAY CORNER, RH	
9	20545-01	TRAY CORNER, LH	
10	20796-01	EDGE TRIM, TRAY CORNER	
11	20955	TRAY BODY	
12	20966	HELIX ADAPTER	
13	21138	DIVIDER, STANDARD	INCLUDES DIVIDER WITH 20133 SPRING, SELECT TYPE, NUMBERS TO FORM COLUMNS
	21139	DIVIDER, HIGH	
	23664	DIVIDER, EXTRA HIGH	
14	22192	HELIX ALIGNMENT DEVICE	OPTIONAL
15	23322	SCROLL, PRICE LABEL, 1-20	
	23321	SCROLL, PRICE LABEL, .00-.95	
16	23471	TRAY STOP IMTERMEDIATE	
17	23785	TRAY STIFFENER	
18	23786	TRAY STIFFENER COVER	
19	23787	GUIDE	
20	23791	10 SELECT COVER	OPTIONAL
	23791-01	10 SELECT COVER, NO WINDOWS	OPTIONAL
21	3000	SCREW	
22	3009-02	RIVET	
23	3009-04	RIVET	
24	3019	CANOE CLIP	
25	3020	WIRE TIE STANDOFF	

MODEL 39 SCROLLING PRICE TRAY PARTS LIST			
ITEM	PART NO.	PART DESCRIPTION	NOTE
26	3042-01	WIRE TIE, PANEL MOUNT	
27	3111	HELIX EJECTOR	
28	3295-03	RIVET	
29	23292	LOCATION LABEL	

Note: Reference model 39 standard tray for additional parts.

THIS PAGE INTENTIONALLY LEFT BLANK

1.5” HELIX TRAY ASSEMBLY PARTS LIST

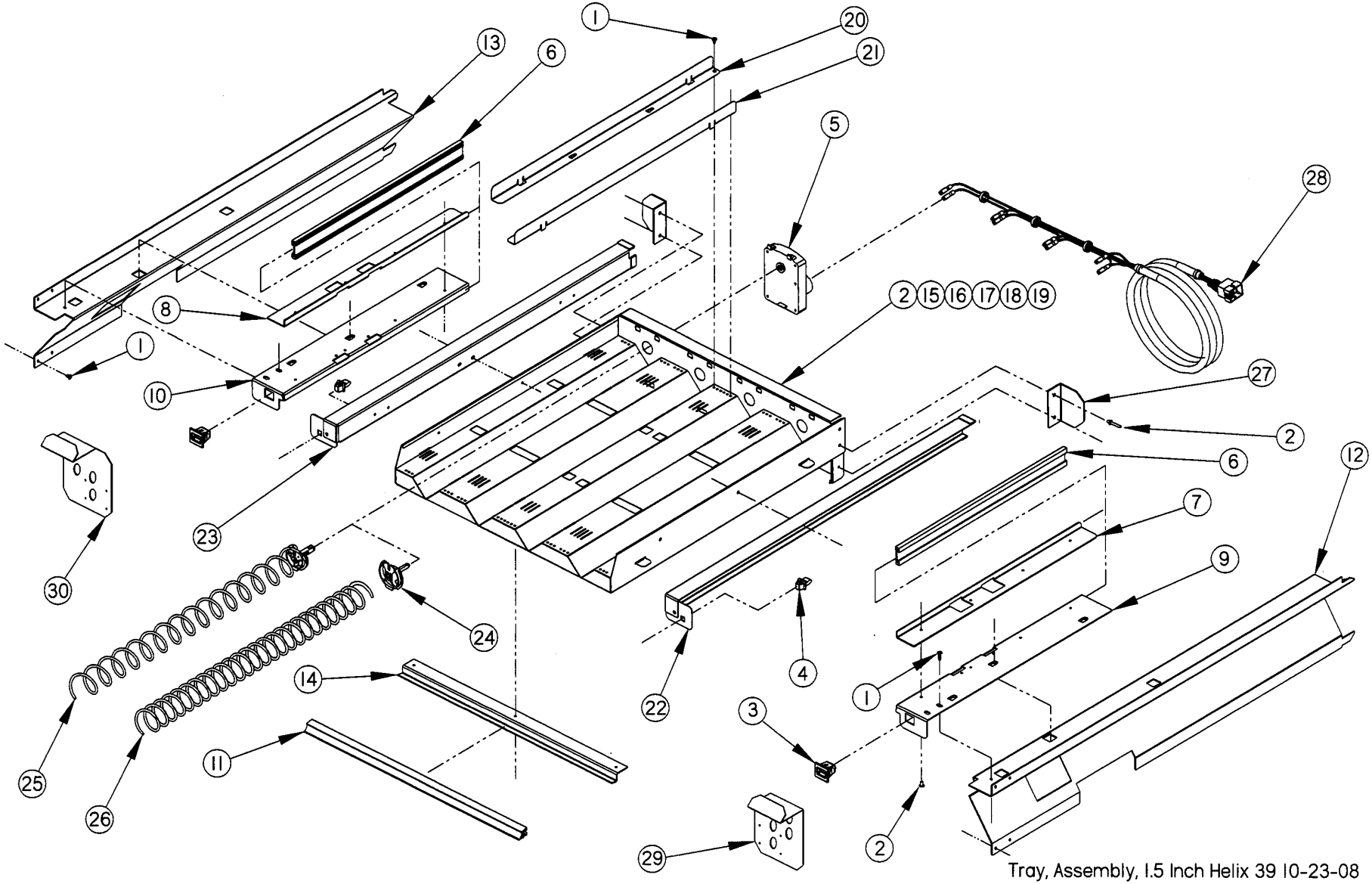

1.5” HELIX TRAY ASSEMBLY PARTS LIST				
ITEM NO	PART NO.	PART NAME	QTY	NOTES
	21193	ASSEMBLY, TRAY, 1.5” HELIX		
1	3000	SCREW, TEK 8-18	18	
2	3009-02	RIVET, POP, STEEL, 1/8	34	
3	3246	LATCH, NYLON, GUM AND MINT	2	
4	3247	STRIKE, NYLON, GUM AND MINT	2	
5	20086	MOTOR, SINGLE HELIX W/O SWITCH	4	
6	20236	EXTRUSION, GUM AND MINT RAIL	2	
7	20237	EXTRUSION MOUNT, UPPER (GUM AND MINT)(RIGHT SIDE)	1	
8	20237-01	EXTRUSION MOUNT, UPPER (GUM AND MINT)(LEFT SIDE)	1	
9	20238	EXTRUSION MOUNT, LOWER (GUM AND MINT)(RIGHT SIDE)	1	
10	20238-01	EXTRUSION MOUNT, LOWER (GUM AND MINT)(LEFT SIDE)	1	
*11	20465-04	EXTRUSION, PRICE MARKER, REDUCED HEIGHT	1	
12	20973	RAIL, GUM AND MINT, REDUCED DEPTH (39”)(RIGHT SIDE)	1	RAILS TO FIT TRAY TO 39” CABINET
13	20973-01	RAIL, GUM AND MINT, REDUCED DEPTH (39”)(LEFT SIDE)	1	
14	21196	DOUBLER, TRAY 1.5” HELIX TRAY	1	
15	21197	TRAY BODY, 1.5” HELIX TRAY	1	PARTS ARE FACTORY ASSEMBLED AS A UNIT
16	21199	TRAY BACK, 1.5” HELIX TRAY	1	
17	21200	TRAY INNER SIDE, 1.5” HELIX TRAY	2	
18	21201	TRAY INNER SECTION, 1.5” HELIX TRAY	2	
19	21202	TRAY INNER MID SECTION, 1.5” HELIX TRAY	1	
20	21203	DIVIDER, TRAY, 1.5” HELIX TRAY, RH	4	
21	21203-01	DIVIDER, TRAY, 1.5” HELIX TRAY, LH	4	
22	21204	TRAY SLIDE CHANNEL,1.5” HELIX TRAY, RH	1	
23	21204-01	TRAY SLIDE CHANNEL,1.5” HELIX TRAY, LH	1	
24	21206	HELIX ADAPTER, 1.5” HELIX TRAY	4	
25	21207-15	HELIX, 1.5” TRAY, COUNTERCLOCKWISE, BLACK	2	TRAY IS EQUIPPED WITH TWO OF EACH SEE HELIX SECTION
26	21207-25	HELIX, 1.5” TRAY, COUNTERCLOCKWISE, BLACK	2	
27	21523	BRACKET, STOP, 1.5” HELIX TRAY	2	
28	21584	HARNESS, 1.5” HELIX TRAY	1	
29	24252	KICKER, GUM AND MINT, 39” GEM	1	PARTS MAY NOT RESEMBLE ILLUSTRATION
30	24252-01	KICKER, GUM AND MINT LH, 39” GEM	1	

*Tray also comes in scrolling price option. Contact your distributor for details.

ELECTRICAL HARNESS ILLUSTRATIONS

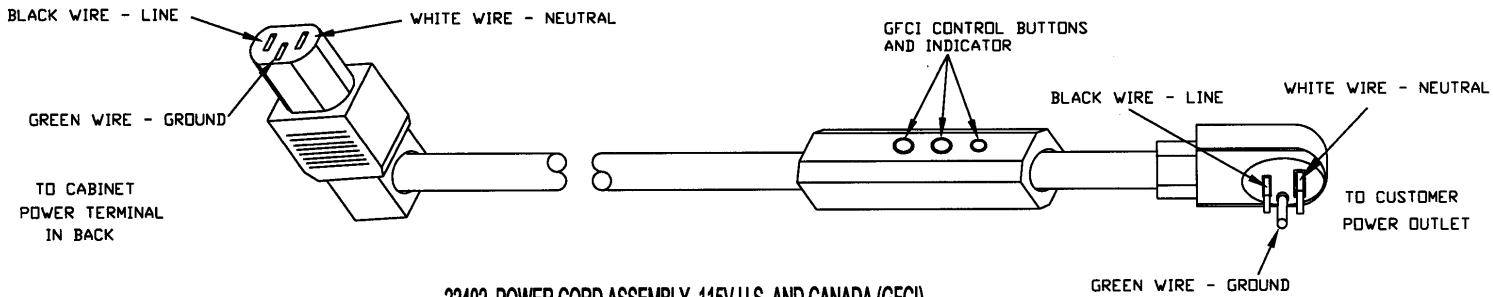

22402, POWER CORD ASSEMBLY, 115V U.S. AND CANADA (GFCI)

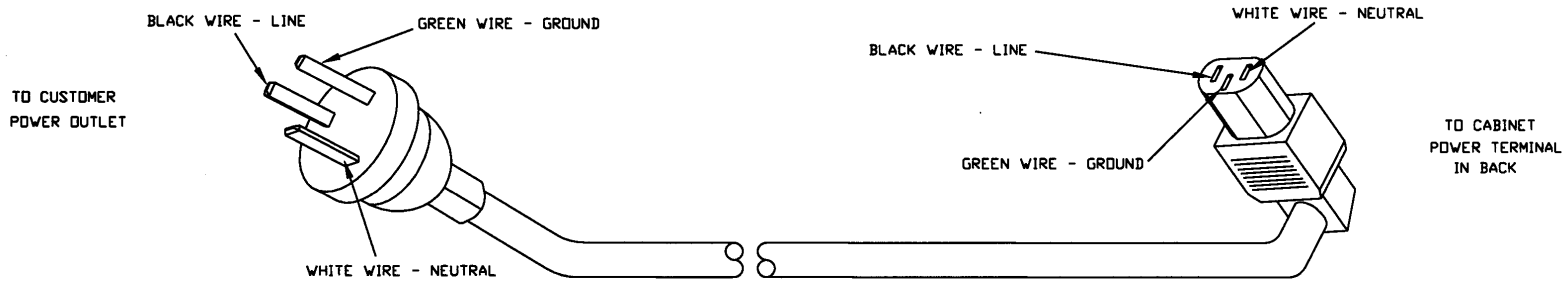

3173, POWER CORD, AUSTRALIA

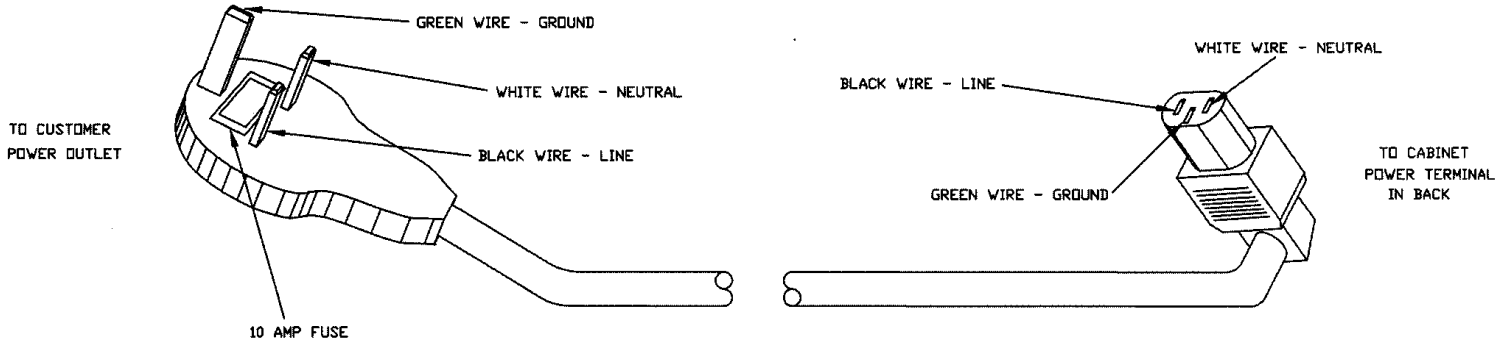

3194, POWER CORD, U.K. & IRELAND

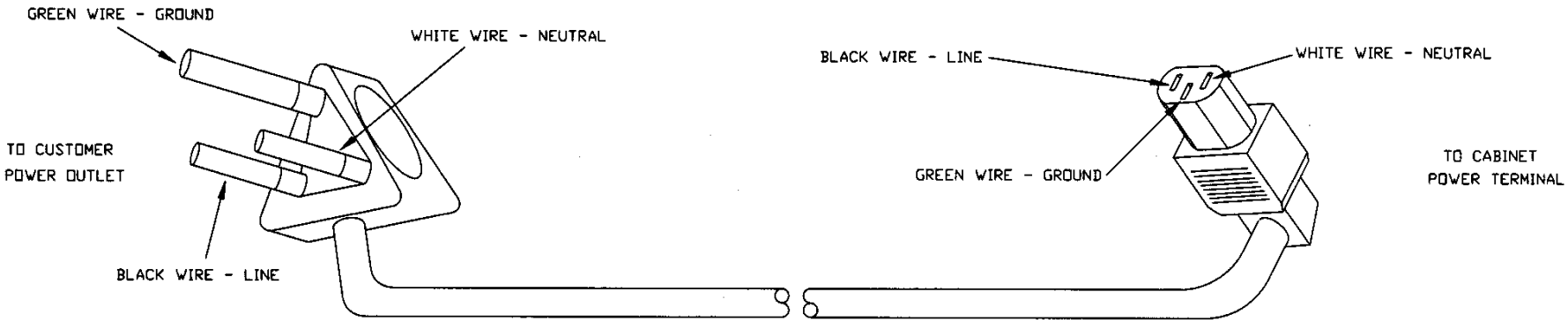

3208 POWER CORD, INDIA AND SOUTH AFRICA

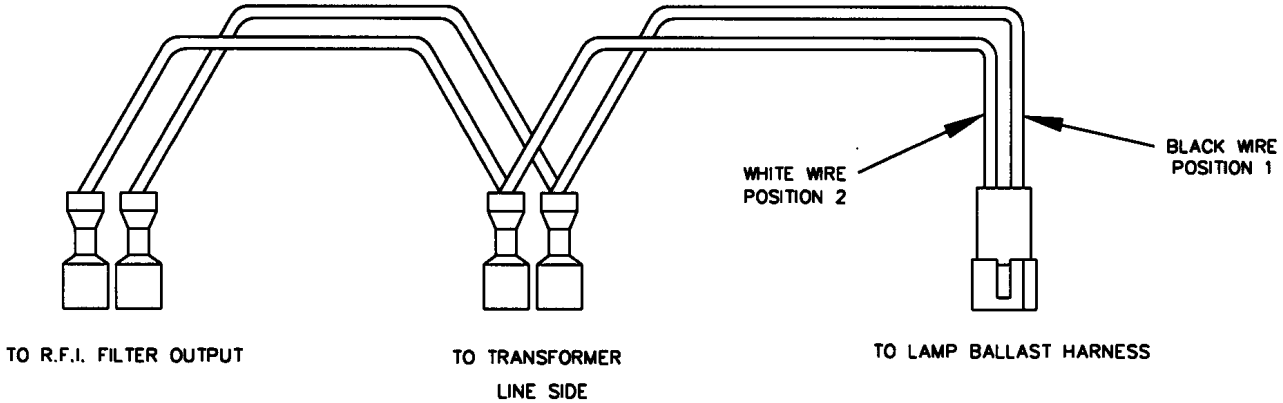

20149, HARNESS, BALLAST/TRANSFORMER LINE

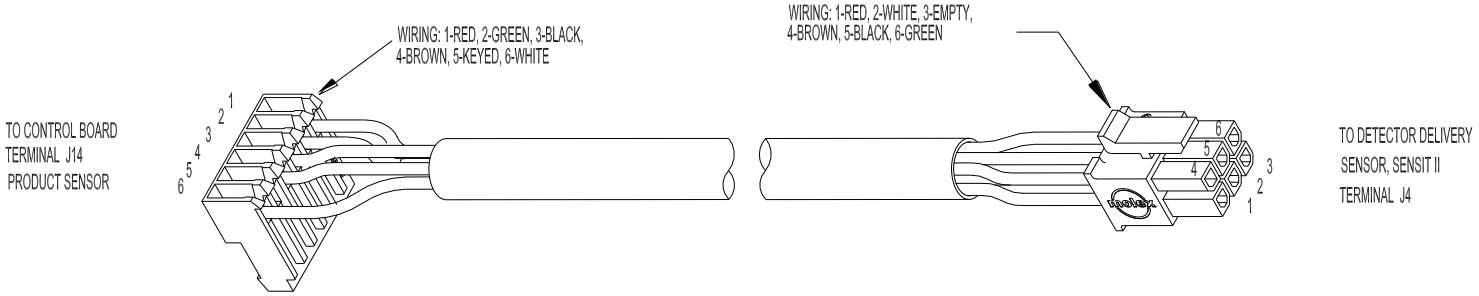

23503 HARNESS, DELIVERY SENSOR DETECTOR/CONTROL, SENSIT II

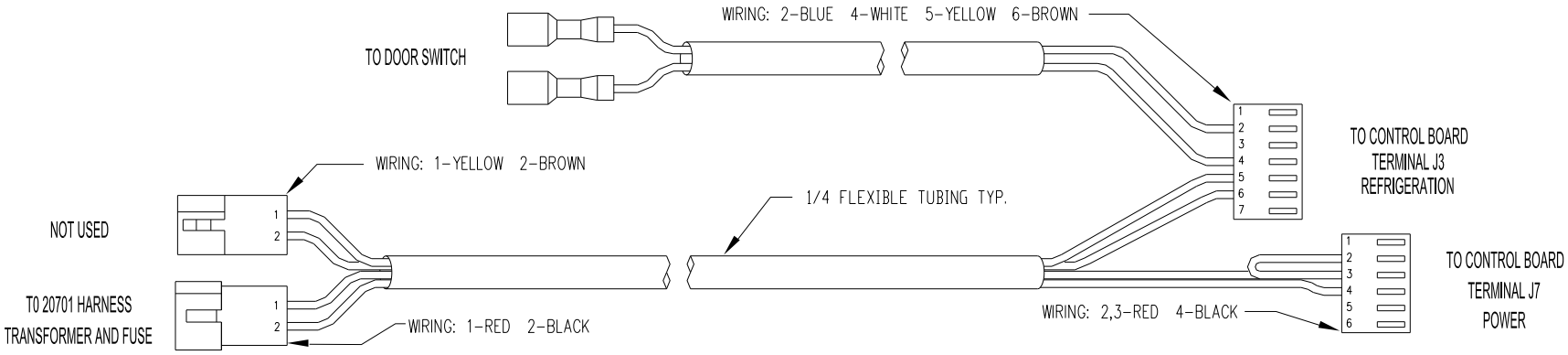

21591, HARNESS, CONTROL POWER AND DOOR SWITCH

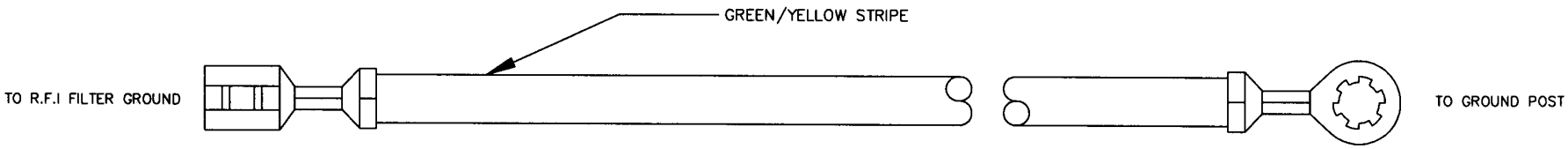

20154, HARNESS, R.F.I. FILTER GROUND

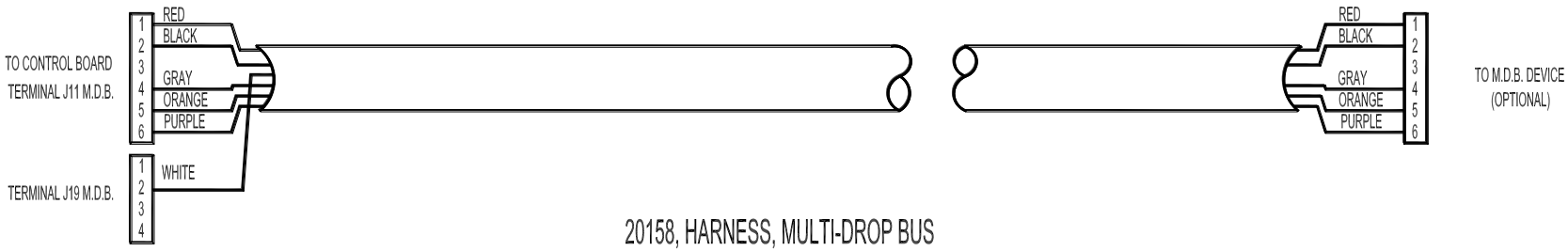

20158, HARNESS, MULTI-DROP BUS

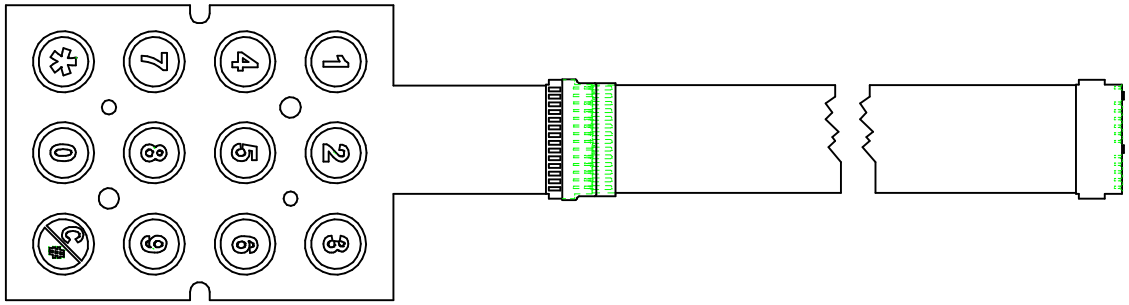

CONNECT TO
CONTROL BOARD J12
THRU 24746 DRIVER BOARD

25688, ASSEMBLY, KEYPAD

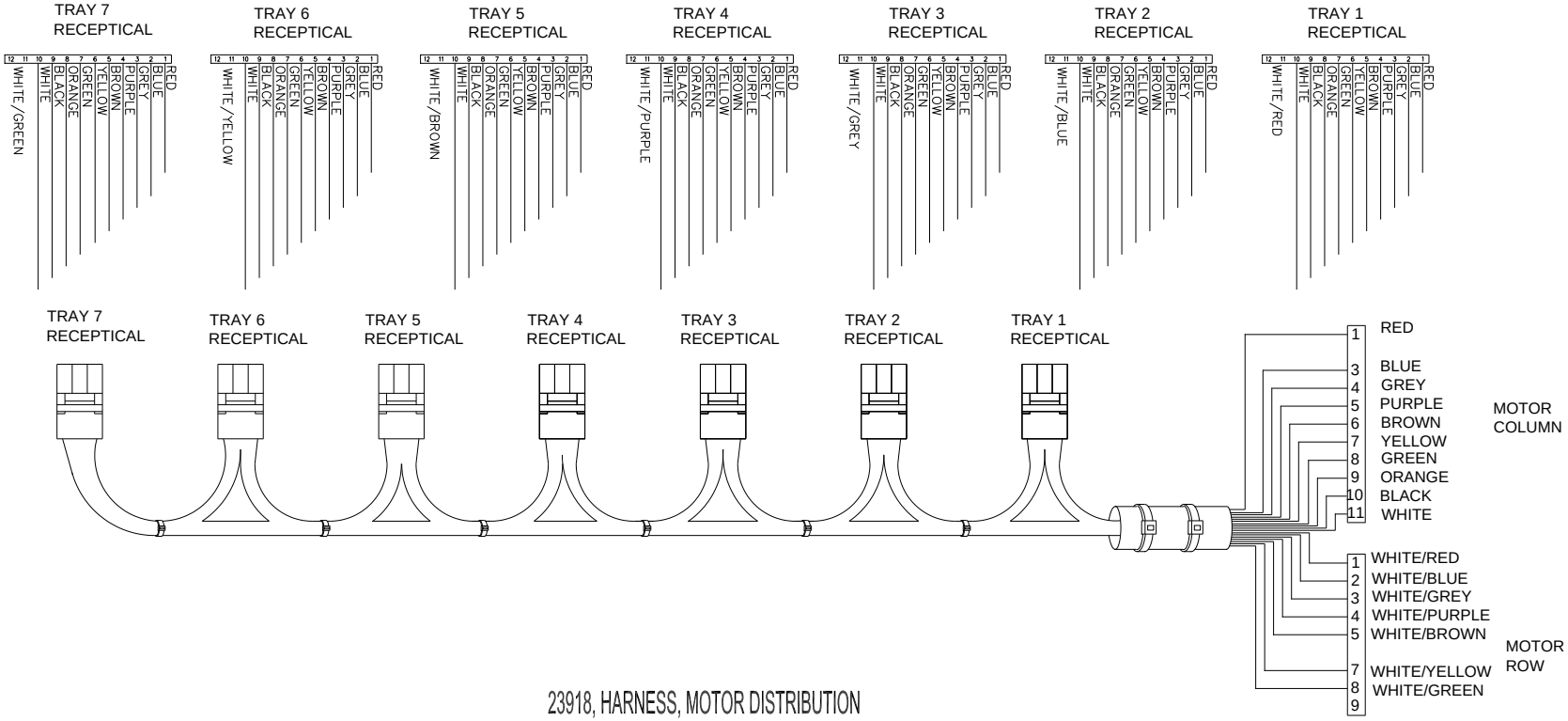

23918, HARNESS, MOTOR DISTRIBUTION

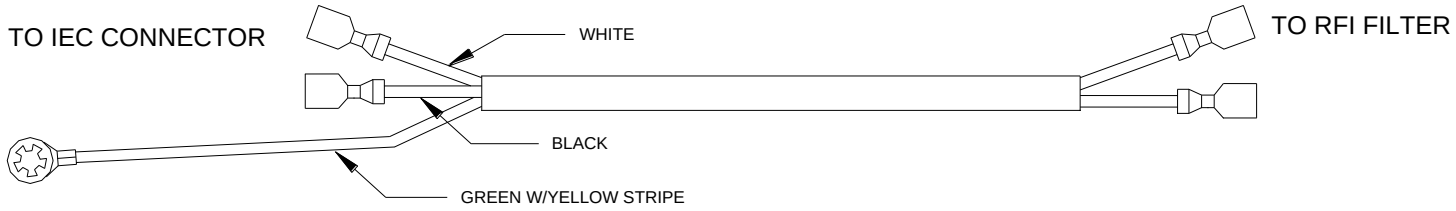

23357, HARNESS POWER INPUT

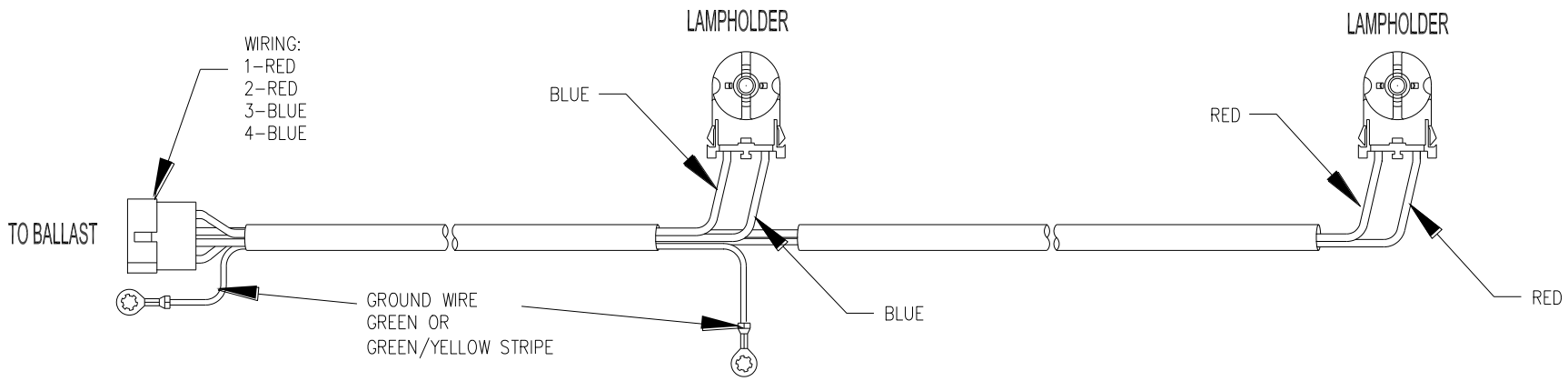

24023, HARNESS, SINGLE LAMP 220V

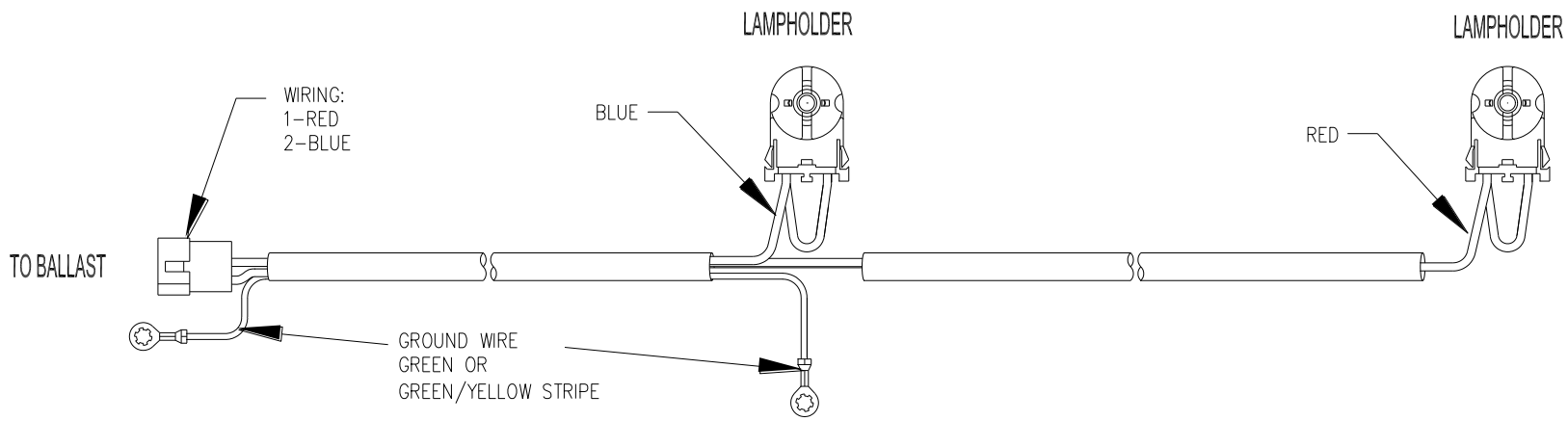

23901, HARNESS,SINGLE LAMP 110V

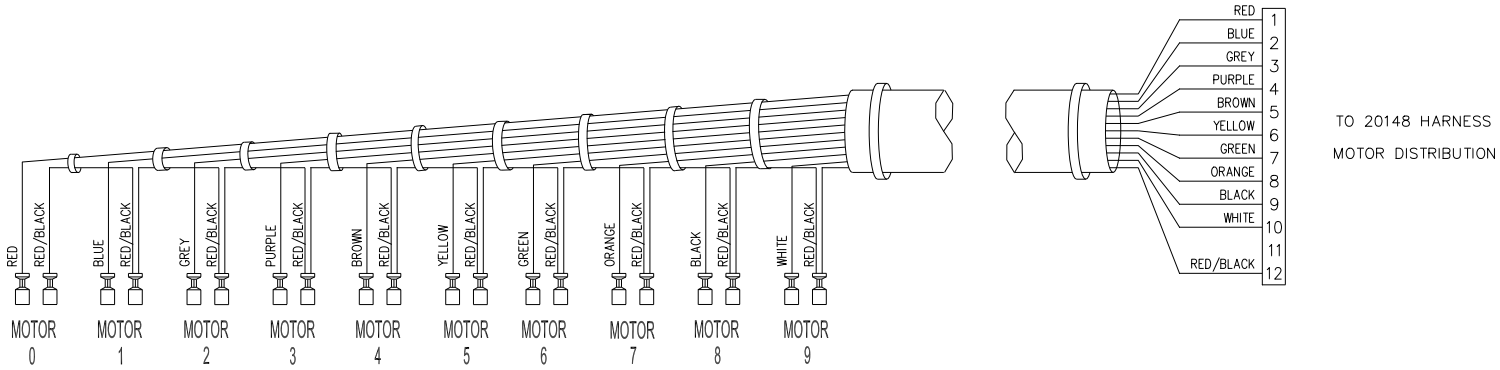

20147, HARNESS, TRAY, 10 COLUMN

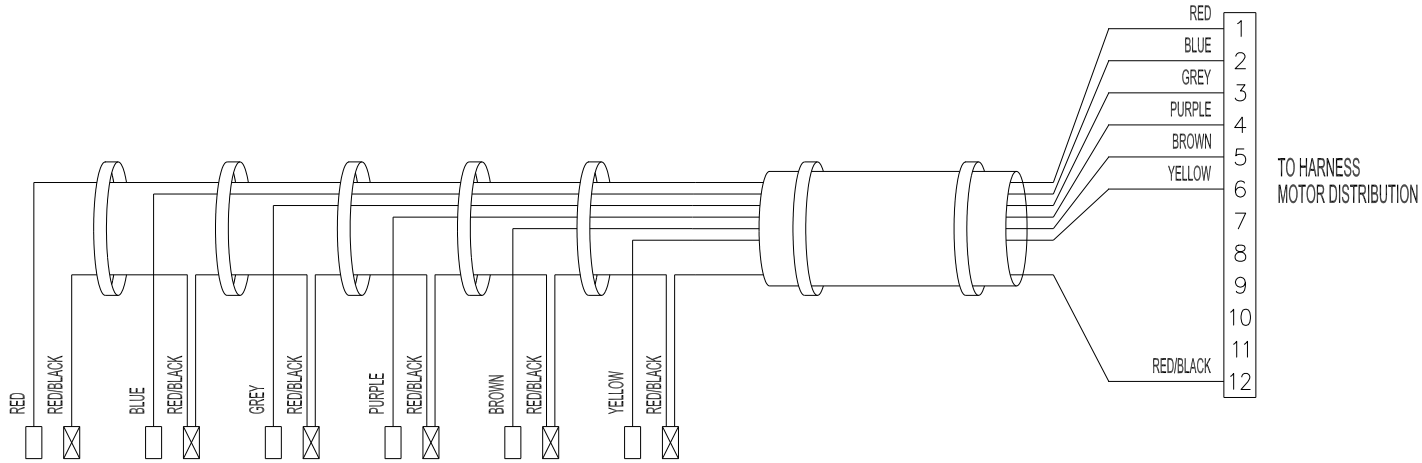

23501, HARNESS, TRAY, 6 COLUMN

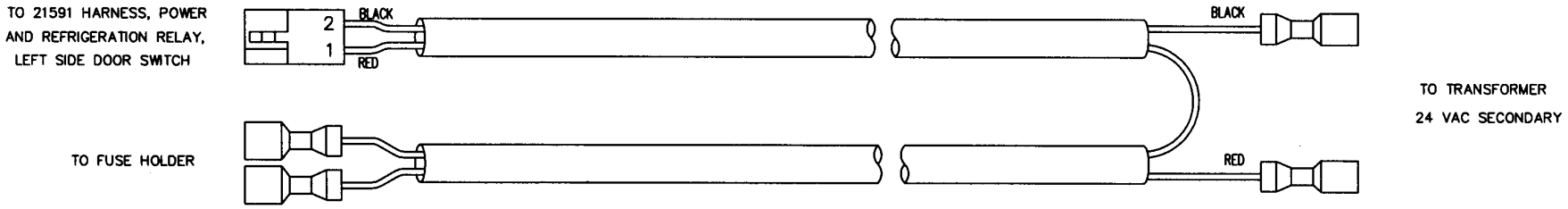

20701, HARNESS, TRANSFORMER AND FUSE

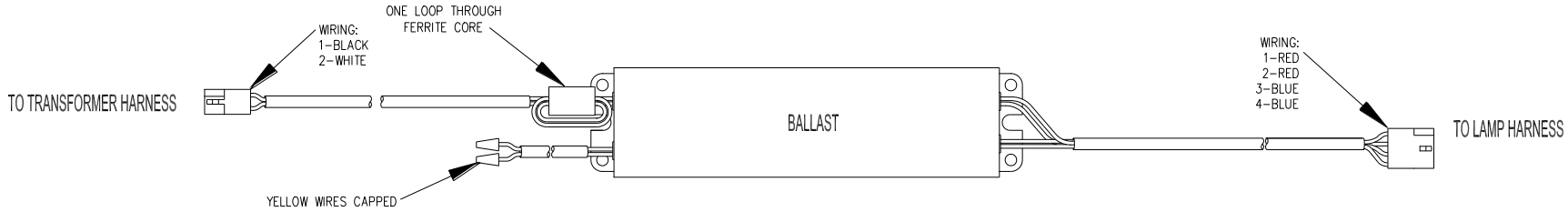

24025, HARNESS, BALLAST, 220V

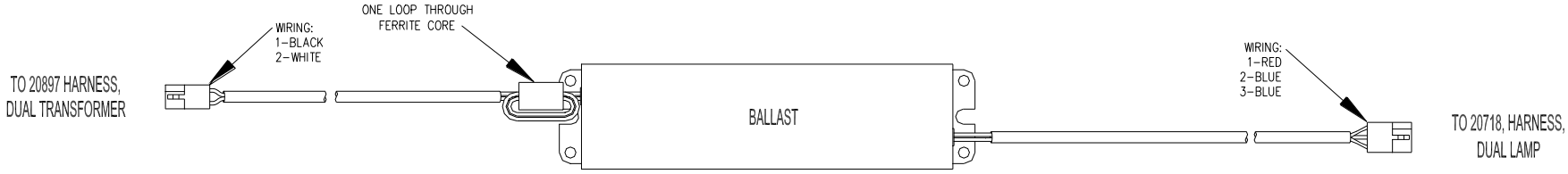

20730, HARNESS, BALLAST, 110V

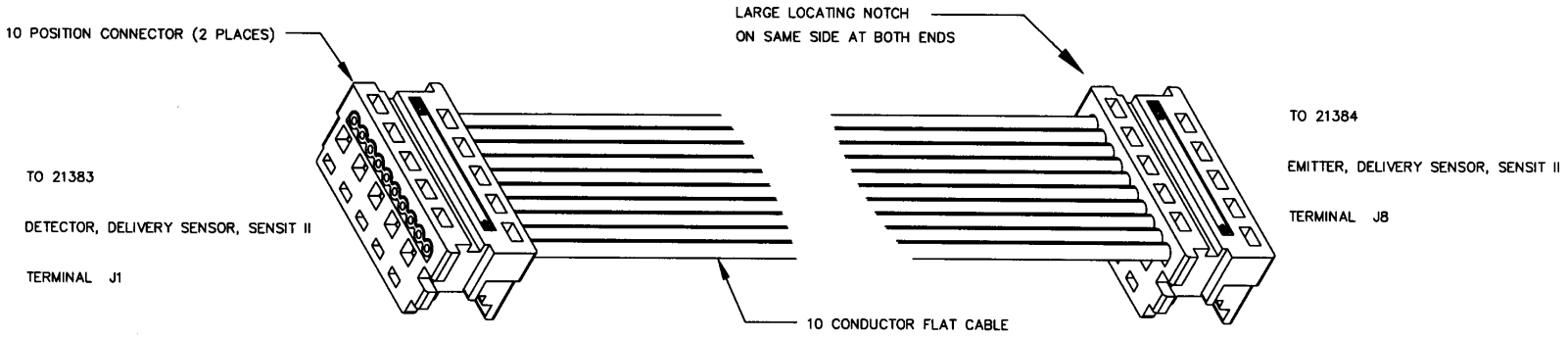

21426 HARNESS, DELIVERY SENSOR DETECTOR/EMITTER, SENSIT II

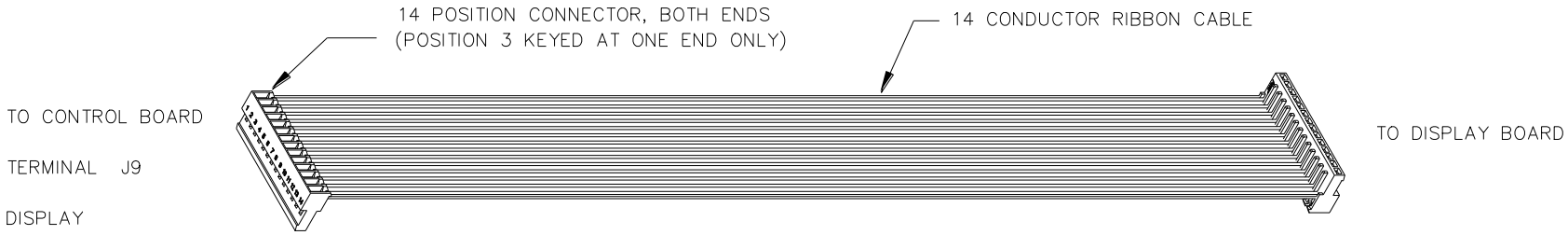

24015 HARNESS, DISPLAY

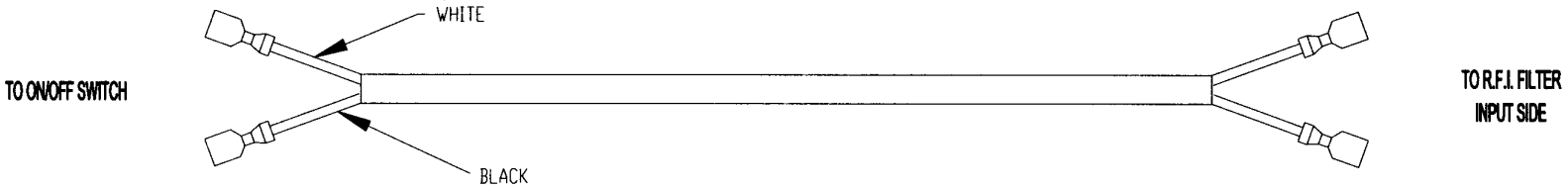

21485, HARNESS, ON/OFF SWITCH

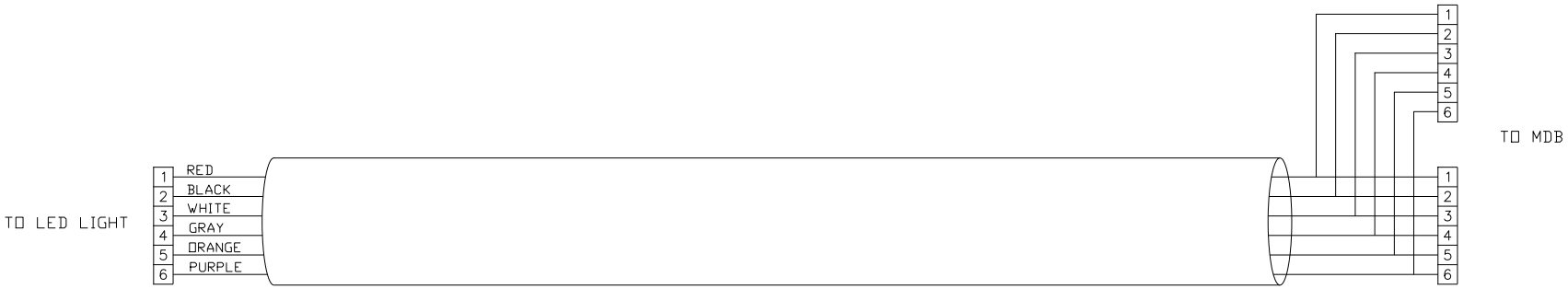

24271, HARNESS, LED/MDB EXTENSION

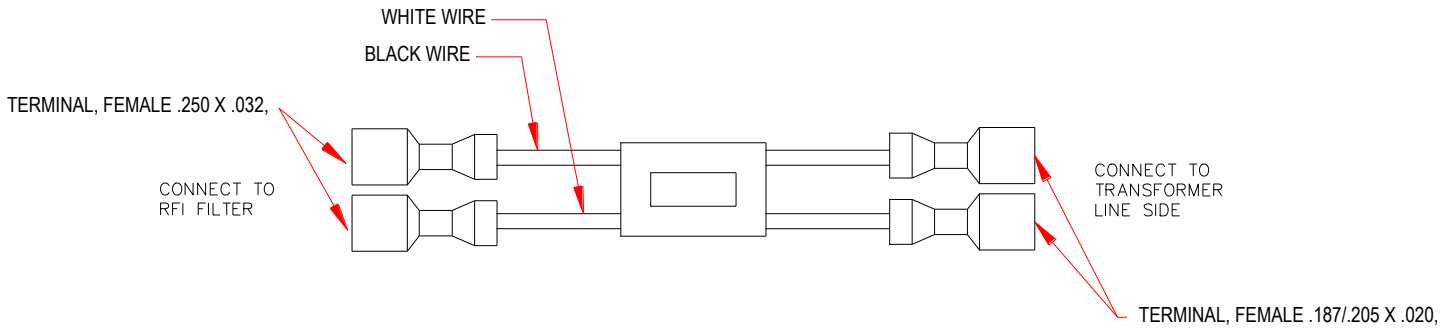

23624, HARNESS, TRANSFORMER, NO BALLAST

PART NO.	PART DESCRIPTION	NOTES
22402	POWER CORD ASSEMBLY, 115V U.S. AND CANADA	
3173	POWER CORD, AUSTRALIA	
3194	POWER CORD, U.K. AND IRELAND	
3208	POWER CORD, INDIA AND SOUTH AFRICA	
20149	HARNESS, BALLAST/ TRANSFORMER	
23503	HARNESS, DELIVERY SENSOR DETECTOR/CONTROL	
21591	HARNESS, CONTROL POWER AND DOOR SWITCH	
20154	HARNESS, R.F.I. FILTER GROUND	
20158	HARNESS, MULTI-DROP BUS	
25688	ASSEMBLY, KEYPAD	
23918	HARNESS, MOTOR DISTRIBUTION	
23901	HARNESS, SINGLE LAMP 110V	110V UNITS
24023	HARNESS, SINGLE LAMP 220V	220V UNITS
23501	HARNESS, TRAY, 6 COLUMN	28” GEM
23357	HARNESS, POWER INPUT	
20701	HARNESS, TRANSFORMERAND FUSE	
20730	HARNESS, BALLAST, 110V	110V UNITS
24025	HARNESS, BALLAST, 220V	220V UNITS
21426	HARNESS, DELIVERY SENSOR DETECTOR,	
21432	HARNESS, DISPLAY, SENSIT II	
21485	HARNESS, ON/OFF SWITCH	
24271	HARNESS, LED/MDB EXTENSION	USE WITH LED OPTION, 39” GEM ONLY
20147	HARNESS, TRAY, 10 COLUMN	39” GEM
23624	HARNESS, TRANSFORMER, NO BALLAST	USE WITH LED OPTION
24338	LIGHTED POS POWER HARNESS	

THIS PAGE INTENTIONALLY LEFT BLANK

MODEL 39 HELIX ILLUSTRATIONS

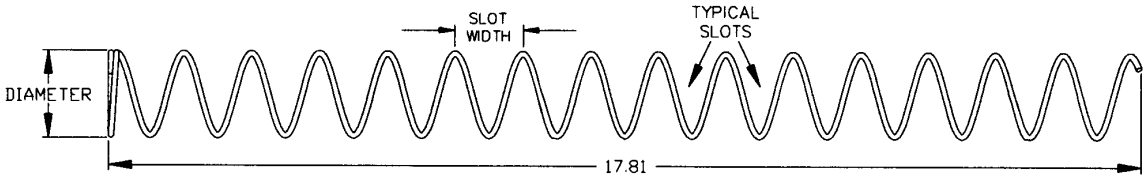

TYPICAL 1.5 HELIX TRAY SMALL HELIX

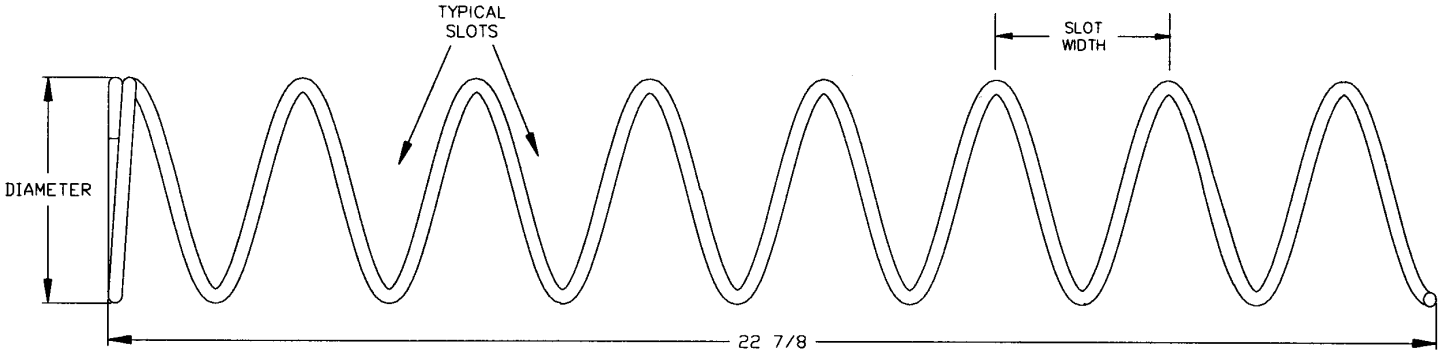

TYPICAL SMALL HELIX

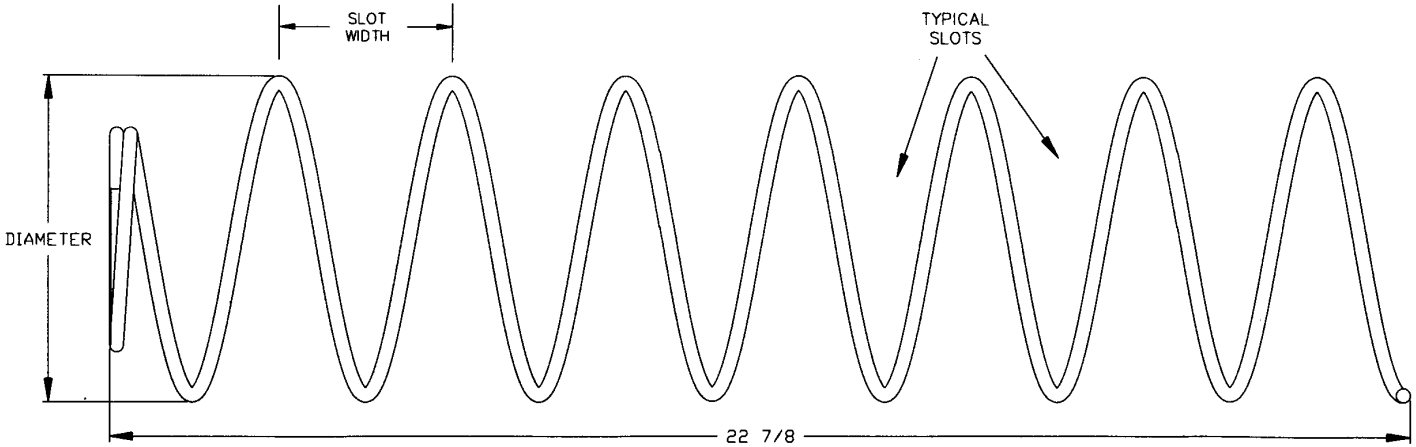

TYPICAL LARGE HELIX

MODEL 39 HELIX PARTS LIST							
PART NO.	HELIX DESCRIPTION *	SLOT (VEND) WIDTH	NUMBER OF SLOTS (PITCH)	HELIX OUTSIDE DIAMETER	TURNS	QTY PER COLUMN	NOTE
20119-07	Helix, Small CW, Black	2 5/8	7	2.6	CW	1 Set	Use With 20120-07 As A Set
20120-07	Helix, Small CCW, Black	2 5/8	7	2.6	CCW	1 Set	
20119-10	Helix, Small CW, Black	1 7/8	10	2.6	CW	1 Set	Use With 20120-10 As A Set
20120-10	Helix, Small CCW, Black	1 7/8	10	2.6	CCW	1 Set	
20120-12	Helix, Small CCW, Black	1 7/8	12	2.6	CCW	1	
20120-15	Helix, Small CCW, Black	1 7/8	15	2.6	CCW	1	
20120-18	Helix, Small CCW, Black	1 7/8	18	2.6	CCW	1	
20120-24	Helix, Small CCW, Black	1 7/8	24	2.6	CCW	1	
21207-15	Helix, 1.5”, CCW, Black	1	15	1.5	CCW	1	Use in 1.5” Helix Tray
21207-25	Helix, 1.5”, CCW, Black	9/16	25	1.5	CCW	1	Use in 1.5” Helix Tray
21336	Helix, 3”, CCW, Black	3.5	6	3	CCW	1	Bottle Tray
21337	Helix, 3”, CCW, Black	3.2	6	3	CCW	1	Bottle Tray
21465-5	Helix, 3.75” CCW, Black	3 ¼	5	3.75	CCW	1	Large Diameter
21465-7	Helix, 3.75” CCW, Black	2 5/8	7	3.75	CCW	1	Large Diameter
21465-9	Helix, 3.75” CCW, Black	2	9	3.75	CCW	1	Large Diameter
21465-10	Helix, 3.75” CCW, Black	1 ¾	10	3.75	CCW	1	Large Diameter
21465-12	Helix, 3.75” CCW, Black	1 ½	12	3.75	CCW	1	Large Diameter
21465-15	Helix, 3.75” CCW, Black	1 ¼	15	3.75	CCW	1	Large Diameter
23268-10	Helix, 1.5”, CCW, Black	2	10	1.5	CCW	1	Use with Mini-Dispenser Kit
23268-20	Helix, 1.5”, CCW, Black	1 1/8	20	1.5	CCW	1	Use with Mini-Dispenser Kit
23268-32	Helix, 1.5”, CCW, Black	5/8	32	1.5	CCW	1	Use with Mini-Dispenser Kit

Contact your distributor for special helix diameters and pitch.
Contact AMS for your application.

MODEL 28 HELIX ILLUSTRATIONS

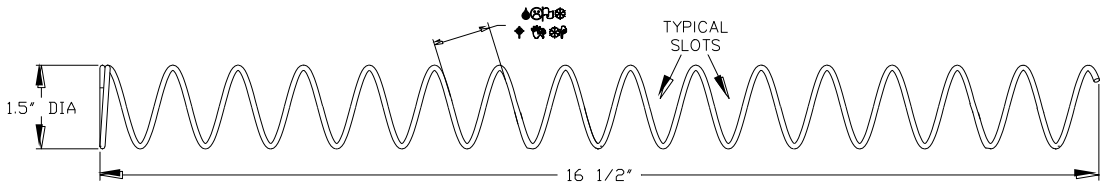

TYPICAL 1.5 HELIX

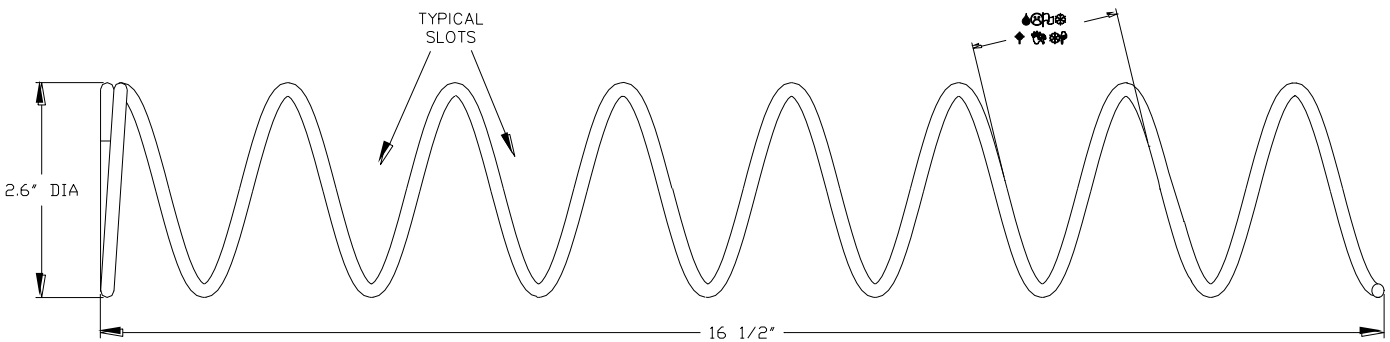

TYPICAL SMALL HELIX

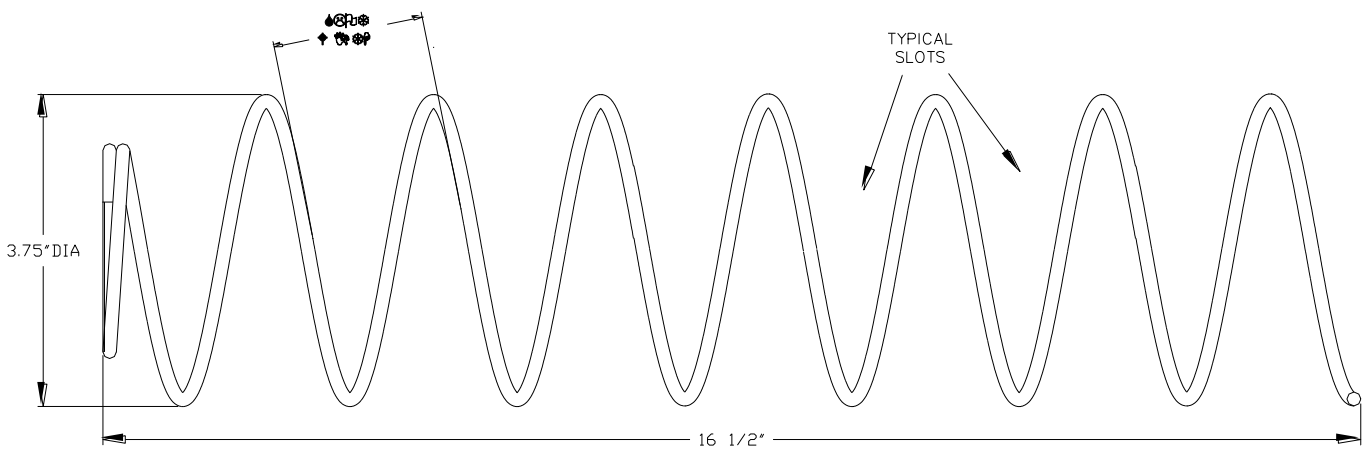

TYPICAL LARGE HELIX

MODEL 28 HELIX PARTS LIST							
PART NO.	HELIX DESCRIPTION *	SLOT (VEND) WIDTH	NUMBER OF SLOTS (PITCH)	HELIX OUTSIDE DIAMETER	TURNS	QTY PER COLUMN	NOTE
24061-07	Helix, 1.5”, CCW, Black	2	7	1.5	CCW	1	Use With Mini-Dispenser Kit 24026-01
24061-14	Helix, 1.5”, CCW, Black	1 1/8	14	1.5	CCW	1	Use With Mini-Dispenser Kit 24026-01
24061-23	Helix, 1.5”, CCW, Black	5/8	23	1.5	CCW	1	Use With Mini-Dispenser Kit 24026-01
24031-03	Helix, 2.6”, CW, Black	3 5/8	3	2.6	CW	1 Set	Use With 23549-03 To Couple Motors
24031-04	Helix, 2.6”, CW, Black	2 3/4	4	2.6	CW	1 Set	Use With 23549-04 To Couple Motors
24031-05	Helix, 2.6”, CW, Black	3	5	2.6	cw	1 Set	Use With 23549-05 To Couple Motors
24031-07	Helix, 2.6”, CW, Black	2	7	2.6	CW	1 Set	Use With 23549-07 To Couple Motors
24031-08	Helix, 2.6”, CW, Black	1 3/4	8	2.6	CW	1 Set	Use With 23549-08 To Couple Motors
24031-10	Helix, 2.6”, CW, Black	1 3/8	10	2.6	CW	1	
23549-03	Helix, 2.6”, CCW, Black	3 5/8	3	2.6	CCW	1	
23549-04	Helix, 2.6”, CCW, Black	3 1/8	4	2.6	CCW	1	
23549-05	Helix, 2.6”, CCW, Black	3	5	2.6	CCW	1	
23549-06	Helix, 2.6”, CCW, Black	2 1/4	6	2.6	CCW	1	
23549-07	Helix, 2.6”, CCW, Black	2	7	2.6	CCW	1	
23549-08	Helix, 2.6”, CCW, Black	1 3/4	8	2.6	CCW	1	
23549-11	Helix, 2.6”, CCW, Black	1 .5	11	2.6	CCW	1	
23549-13	Helix, 2.6”, CCW, Black	1 3/16	13	2.6	CCW	1	
23549-17	Helix, 2.6”, CCW, Black	1	17	2.6	CCW	1	
23976-03	Helix, 3.75”, CCW, Black	4 1/4	3	3.75	CCW	1	
23976-04	Helix, 3.75”, CCW, Black	3 5/8	4	3.75	CCW	1	
23976-05	Helix, 3.75”, CCW, Black	2 3/4	5	3.75	CCW	1	
23976-06	Helix, 3.75”, CCW, Black	2 1/4	6	3.75	CCW	1	
23976-07	Helix, 3.75”, CCW, Black	2	7	3.75	CCW	1	
23976-09	Helix, 3.75”, CCW, Black	1 3/4	9	3.75	CCW	1	
23976-11	Helix, 3.75”, CCW, Black	1 3/8	11	3.75	CCW	1	
23976-17	Helix, 3.75”, CCW, Black	1	17	3.75	CCW	1	

Contact your distributor for special helix diameters and pitch. Contact AMS for your application.